LOT 78
IN OR 2166/1284
HAMPTON LAKES #2 PBK 8/165

BROOKS MICHAEL J & JENNIFER E
85006 MAJESTIC WALK BLVD
FERNANDINA BEACH, FL 32034

2023

24-2N-27-0721-0078-0000

NASSAU COUNTY PROPERTY

BUILDING CHARACTERISTICS

ELEMENT	CD	CONSTRUCTION
Exterior Wall	31	HARDIE BRD 100
Roof Structur	03	GABLE/HIP 100
Roof Cover	03	COMP SHNGL 100
Interior Wall	05	DRYWALL 100
Interior Floo	11	CLAY TILE 50
Interior Floo	14	CARPET 50
Air Condition	03	CENTRAL 100
Heating Type	04	AIR DUCTED 100
Bedrooms		5 100
Bathrooms		4 100
Frame	02	WOOD FRAME 100
Stories	2.	2. 100
Units		0 100
Occupancy	00	NONE 100
Quality	03	Quality Level 03
DOR CODE	0100	SINGLE FAMILY
MAP NUM		MKT AREA 04
NEIGHBORHOOD/LOC	4085.00	

AREA TYPE	TOTAL GROSS AREA	PCT OF BASE	TOT ADJ AREA	SUBAREA MARKET VALUE
BAS	3,216	100	3,216	365,312
FGR	832	55	458	52,025
FOP	205	30	62	7,042
FOP	320	30	96	10,904
FUS	921	100	921	104,618
STR	52	10	5	568
TOTALS	5,546		4,758	540,470

MARKET ADJUSTMENTS

TYPE	MDL	EFF. AREA	TOT ADJ PTS	EFF. BASE RATE	REPL. COST NEW	AYB	EYB	ECON	FNCT		NORM	% COND
0900	01	4,758	97.6100	115.91	551,500	2017	2017	0	0	0	2.00	98.00

1 SNGL FAM – 100% - 2018 Heated Area: 4137 HX Base Yr 2018

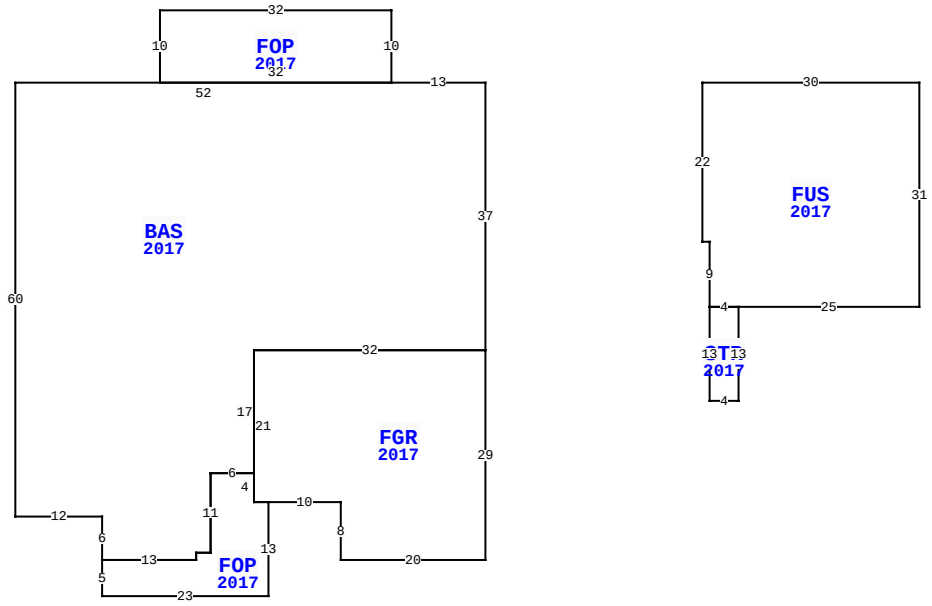

85006 MAJESTIC WALK BLVD, FERNANDINA BEACH

BLD DATE		LGL DATE	
XF DATE		LAND DATE	06/13/2023 MLU
INC DATE		AG DATE	

NASSAU COUNTY PROPERTY — VALUATION SUMMARY

VALUATION BY		STANDARD
Tax Group: 4	Tax Dist:	
BUILDING MARKET VALUE		540,470
TOTAL MARKET OB/XF VALUE		51,152
TOTAL LAND VALUE - MARKET		75,000
TOTAL MARKET VALUE		666,622
SOH/AGL Deduction		244,839
ASSESSED VALUE		421,783
TOTAL EXEMPTION VALUE	HX HB	50,000
BASE TAXABLE VALUE		371,783
TOTAL JUST VALUE		666,622
NCON VALUE		0
INCOME VALUE		
PREVIOUS YEAR MKT VALUE		524,838

PERMIT NUM	DESCRIPTION	AMT	ISSUED
17011386	CO ISSUED	0	12/20/2017
17009122	SWIM POOL	52,500	10/16/2017
17006508	NEW CONSTR	509,470	07/20/2017

SALES DATA

OFF RECORD Number	DATE	TYPE INST	Q U	V I	RSN CD	SALE PRICE
2166/1284	12/21/2017	SW	Q	I	02	549,700
GRANTOR: AVH NORTH FLORIDA LLC						
GRANTEE: BROOKS MICHAEL J &						
2089/0966	12/16/2016	SW	U	V	37	6,730,600
GRANTOR: AW VENTURE II LLC						
GRANTEE: AVH NORTH FLORIDA L						

BUILDING NOTES

BUILDING DIMENSIONS

BAS=[YR=2017] W13 FOP=[YR=2017] N10 W32 S10 E32$ W52 S60 E12 S6 FOP=[YR=2017] S5 E23 N13 FGR=[YR=2017] E10 S8 E20 N29 W32 S21 E2$ W2 N4 W6 S11 W2 S1 W13$ E13 N1 E2 N11 E6 N17 E32 N37$ PTR=[YR=2017] E30 FUS=[YR=2017] E30 S31 W25 STR=[YR=2017] S13 W4 N13 E4$ W4 N9 W1 N22$ W30$.

EXTRA FEATURES

L N	OB/XF CODE	DESCRIPTION	BLD	CAP	L	W	UNITS	UT	Adj R	ADJ UNIT PRICE	ORIG COND	YEAR ON	YEAR ACTUAL	Q	% COND	OB/XF MKT VALUE	NOTES
1	0855	CONC PAVER	0	100	0	0	1,787.00	SF	10.00	10.00	100	2017	2017	3	97	17,334	
2	0861	POOL GUNIT	0	100	14	16	224.00	SF	85.00	85.00	100	2017	2017	3	87	16,565	
3	0871	POOL HTR R	0	100	0	0	1.00	UT	2,000.00	2,000.00	100	2017	2017	3	82	1,640	
4	0911	SCRN RM A	0	100	64	17	1,088.00	SF	17.50	17.50	100	2017	2017	3	82	15,613	

LAND DESCRIPTION

TOTAL OB/XF 51,152

L N	USE CODE	CLS	LAND USE DESCRIPTION	CAP	R D	LOC ZONE	FRONT	DEPTH	TOT LND UTS	UNIT TYPE	D T	DPTH FACT	% COND	TOT ADJ	UNIT PRICE	ADJ UNIT PRICE	LAND VALUE	OTHER ADJUSTMENTS AND NOTES	YEAR	DENSITY	DECL	FRZ	YR	CONSRV
1	000133	C	SFR LAKE	100			0.00	0.00	1.00	LT		1.00	1.00	1.00	75,000.00	75,000.00	75,000							

REVIEW DATE 04/04/2018 BY SB Total Acres: 0.00 Total Land Value: 75,000 Market: 0 Agricultural: 0 Common: 75,000 PRINTED 08/02/2023 BY SYS