LOT 74
IN OR 2203/1102
HAMPTON LAKES #2 PBK 8/165

HEDDEN CHRISTOPHER L & KRISTIN M
85022 MAJESTIC WALK BLVD
FERNANDINA BEACH, FL 32034

2023

24-2N-27-0721-0074-0000

BUILDING CHARACTERISTICS

ELEMENT	CD	CONSTRUCTION
Exterior Wall	16	WD FR STUC 100
Roof Structur	03	GABLE/HIP 100
Roof Cover	03	COMP SHNGL 100
Interior Wall	05	DRYWALL 100
Interior Floo	11	CLAY TILE 50
Interior Floo	14	CARPET 50
Air Condition	03	CENTRAL 100
Heating Type	04	AIR DUCTED 100
Bedrooms		6 100
Bathrooms		4 100
Frame	02	WOOD FRAME 100
Stories	2.	2. 100
Units		0 100
Occupancy	00	NONE 100
Quality	03	Quality Level 03
DOR CODE	0100	SINGLE FAMILY
MAP NUM		MKT AREA 04
NEIGHBORHOOD/LOC	4085.00	

AREA TYPE	TOTAL GROSS AREA	PCT OF BASE	TOT ADJ AREA	SUBAREA MARKET VALUE
BAS	3,212	100	3,212	364,857
FGR	712	55	392	44,528
FOP	140	30	42	4,771
FOP	244	30	73	8,292
FUS	921	100	921	104,618
STR	52	10	5	568
TOTALS	5,281		4,645	527,634

MARKET ADJUSTMENTS

TYPE	MDL	EFF. AREA	TOT ADJ PTS	EFF. BASE RATE	REPL. COST NEW	AYB	EYB	ECON	FNCT		NORM	% COND
0900	01	4,645	97.6100	115.91	538,402	2018	2018	0	0	0	2.00	98.00

1 SNGL FAM – 100% - 2019 Heated Area: 4133 HX Base Yr 2019

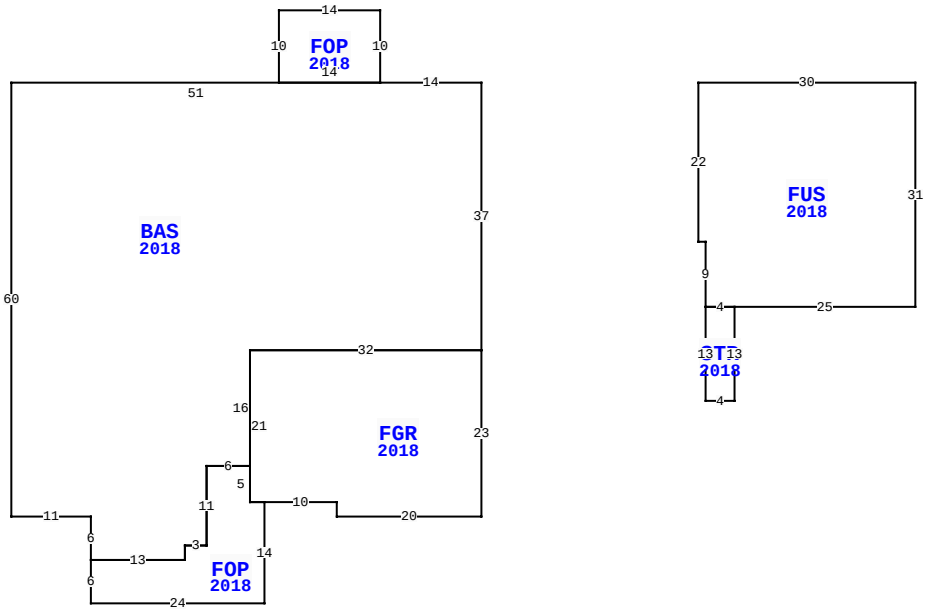

85022 MAJESTIC WALK BLVD, FERNANDINA BEACH

BLD DATE		LGL DATE	
XF DATE		LAND DATE	06/13/2023 MLU
INC DATE		AG DATE	

NASSAU COUNTY PROPERTY

PAGE 1 of 1 4

VALUATION SUMMARY

VALUATION BY		STANDARD
Tax Group: 4	Tax Dist:	
BUILDING MARKET VALUE		527,634
TOTAL MARKET OB/XF VALUE		19,071
TOTAL LAND VALUE - MARKET		75,000
TOTAL MARKET VALUE		621,705
SOH/AGL Deduction		220,161
ASSESSED VALUE		401,544
TOTAL EXEMPTION VALUE	HX HB	50,000
BASE TAXABLE VALUE		351,544
TOTAL JUST VALUE		621,705
NCON VALUE		0
INCOME VALUE		
PREVIOUS YEAR MKT VALUE		500,883

PERMIT NUM	DESCRIPTION	AMT	ISSUED
18005599	CO ISSUED	0	06/04/2018
17010514	NEW CONSTR	520,012	11/28/2017

SALES DATA

OFF RECORD Number	DATE	TYPE INST	Q / U	V / I	RSN CD	SALE PRICE
2203/1102	6/08/2018	SW	Q	I	01	443,200
GRANTOR: AVH NORTH FLORIDA LLC						
GRANTEE: HEDDEN CHRISTOPHER						
2089/0966	12/16/2016	SW	U	V	37	6,730,600
GRANTOR: AW VENTURE II LLC						
GRANTEE: AVH NORTH FLORIDA L						

BUILDING NOTES

BUILDING DIMENSIONS

BAS=[YR=2018] W14 FOP=[YR=2018] N10 W14 S10 E14$ W51 S60 E11 S6 FOP=[YR=2018] S6 E24 N14 FGR=[YR=2018] E10 S2 E20 N23 W32 S21 E2$ W2 N5 W6 S11 W3 S2 W13$ E13 N2 E3 N11 E6 N16 E32 N37$ PTR=[YR=2018] E30 FUS=[YR=2018] E30 S31 W25 STR=[YR=2018] S13 W4 N13 E4$ W4 N9 W1 N22$ W30$.

EXTRA FEATURES

LN	OB/XF CODE	DESCRIPTION	BLD	CAP	L	W	UNITS	UT	Adj R	ADJ UNIT PRICE	ORIG COND	YEAR ON	YEAR ACTUAL	Q	% COND	OB/XF MKT VALUE	NOTES
1	0855	CONC PAVER	0	100	0	0	1,946.00	SF	10.00	10.00	100	2018	2018	3	98	19,071	

LAND DESCRIPTION

TOTAL OB/XF 19,071

LN	USE CODE	CLS	LAND USE DESCRIPTION	CAP	RD	LOC ZONE	FRONT	DEPTH	TOT LND UTS	UNIT TYPE	DT	DPTH FACT	% COND	TOT ADJ	UNIT PRICE	ADJ UNIT PRICE	LAND VALUE	OTHER ADJUSTMENTS AND NOTES	YEAR	DENSITY	DECL	FRZ	YR	CONSRV
1	000133	C	SFR LAKE	100			0.00	0.00	1.00	LT		1.00	1.00	1.00	75,000.00	75,000.00	75,000							

REVIEW DATE 04/25/2019 BY DJ Total Acres: 0.00 Total Land Value: 75,000 Market: 0 Agricultural: 0 Common: 75,000 PRINTED 08/02/2023 BY SYS