LOT 71
HAMPTON LAKES #2 PBK 8/165

BELL GREGORY M & LISA A
85034 MAJESTIC WALK BLVD
FERNANDINA BEACH, FL 32034

2023

24-2N-27-0721-0071-0000

BUILDING CHARACTERISTICS

ELEMENT	CD	CONSTRUCTION
Exterior Wall	31	HARDIE BRD 100
Roof Structur	03	GABLE/HIP 100
Roof Cover	03	COMP SHNGL 100
Interior Wall	05	DRYWALL 100
Interior Floo	11	CLAY TILE 60
Interior Floo	14	CARPET 40
Air Condition	03	CENTRAL 100
Heating Type	04	AIR DUCTED 100
Bedrooms		4 100
Bathrooms		3 100
Frame	02	WOOD FRAME 100
Stories	2.	2. 100
Units		0 100
Occupancy	00	NONE 100
Quality	03	Quality Level 03
DOR CODE	0100	SINGLE FAMILY
MAP NUM		MKT AREA 04
NEIGHBORHOOD/LOC	4085.00	

AREA TYPE	TOTAL GROSS AREA	PCT OF BASE	TOT ADJ AREA	SUBAREA MARKET VALUE
BAS	3,209	100	3,209	364,132
FGR	712	55	392	44,481
FOP	249	30	75	8,510
FOP	320	30	96	10,893
FUS	893	100	893	101,331
STR	56	10	6	681
TOTALS	5,439		4,671	530,028

MARKET ADJUSTMENTS

TYPE	MDL	EFF. AREA	TOT ADJ PTS	EFF. BASE RATE	REPL. COST NEW	AYB	EYB	ECON	FNCT		NORM	% COND
0900	01	4,671	97.0080	115.20	538,099	2018	2018	0	0	0	1.50	98.50

1 SNGL FAM – 100% - 2022 Heated Area: 4102 HX Base Yr 2022

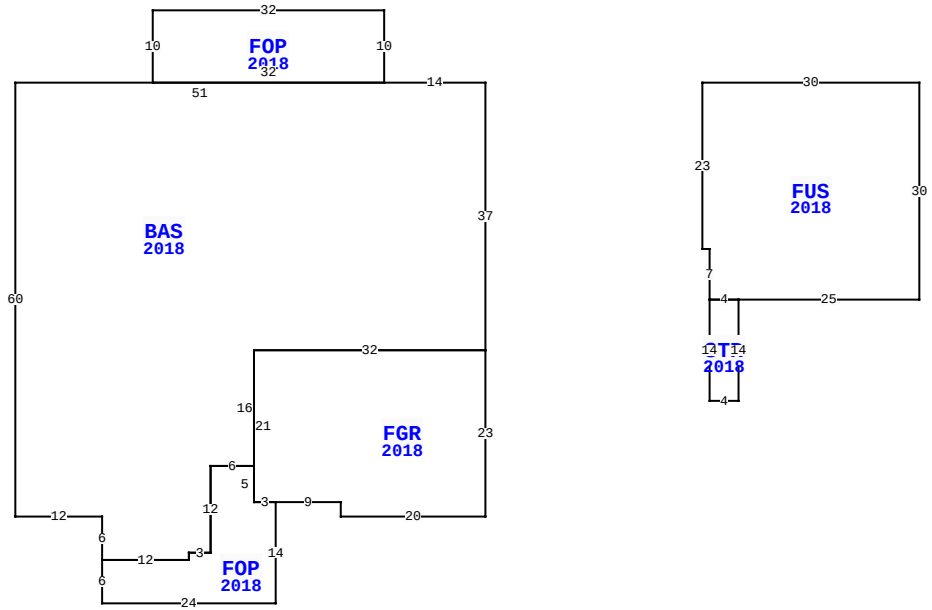

85034 MAJESTIC WALK BLVD, FERNANDINA BEACH

BLD DATE		LGL DATE	
XF DATE		LAND DATE	06/13/2023 MLU
INC DATE		AG DATE	

NASSAU COUNTY PROPERTY

PAGE 1 of 1 4

VALUATION SUMMARY

VALUATION BY		STANDARD
Tax Group: 4	Tax Dist:	
BUILDING MARKET VALUE		530,028
TOTAL MARKET OB/XF VALUE		18,914
TOTAL LAND VALUE - MARKET		75,000
TOTAL MARKET VALUE		623,942
SOH/AGL Deduction		144,350
ASSESSED VALUE		479,592
TOTAL EXEMPTION VALUE	HX HB	50,000
BASE TAXABLE VALUE		429,592
TOTAL JUST VALUE		623,942
NCON VALUE		0
INCOME VALUE		
PREVIOUS YEAR MKT VALUE		502,677

PERMIT NUM	DESCRIPTION	AMT	ISSUED
18001010	CO ISSUED	0	01/30/2018
17006727	NEW CONSTR	509,470	07/27/2017

SALES DATA

OFF RECORD Number	DATE	TYPE INST	Q U	V I	RSN CD	SALE PRICE
2474/1802	6/28/2021	WD	Q	I	01	647,000
GRANTOR: VAUGHN THOMAS C III &						
GRANTEE: BELL GREGORY M & LI						
2186/0122	3/23/2018	SW	Q	I	02	450,000
GRANTOR: AVH NORTH FLORIDA LLC						
GRANTEE: VAUGHN THOMAS C III						

BUILDING NOTES

BUILDING DIMENSIONS

BAS=[YR=2018] W14 FOP=[YR=2018] N10 W32 S10 E32$ W51 S60 E12 S6 FOP=[YR=2018] S6 E24N14 FGR=[YR=2018] E9 S2 E20 N23 W32 S21 E3$ W3 N5 W6 S12 W3 S1 W12$ E12 N1 E3 N12 E6 N16 E32 N37$ PTR=[YR=2018] E30 FUS=[YR=2018] E30 S30 W25 STR=[YR=2018] S14 W4 N14 E4$ W4 N7 W1 N23$ W30$.

EXTRA FEATURES

LN	OB/XF CODE	DESCRIPTION	BLD	CAP	L	W	UNITS	UT	Adj R	ADJ UNIT PRICE	ORIG COND	YEAR ON	YEAR ACTUAL	Q	% COND	OB/XF MKT VALUE	NOTES
1	0855	CONC PAVER	0	100	0	0	1,930.00	SF	10.00	10.00	100	2018	2018	3	98	18,914	

LAND DESCRIPTION

TOTAL OB/XF 18,914

LN	USE CODE	CLS	LAND USE DESCRIPTION	CAP	RD	LOC ZONE	FRONT	DEPTH	TOT LND UTS	UNIT TYPE	DT	DPTH FACT	% COND	TOT ADJ	UNIT PRICE	ADJ UNIT PRICE	LAND VALUE	OTHER ADJUSTMENTS AND NOTES	YEAR	DENSITY	DECL	FRZ	YR	CONSRV
1	000133	C	SFR LAKE	100			0.00	0.00	1.00	LT		1.00	1.00	1.00	75,000.00	75,000.00	75,000							

REVIEW DATE 04/11/2019 BY TW Total Acres: 0.00 Total Land Value: 75,000 Market: 0 Agricultural: 0 Common: 75,000 PRINTED 08/02/2023 BY SYS