LOT 62
IN OR 2168/904
HAMPTON LAKES #2 PBK 8/165

BOYCE CLARENCE D & KAREN L
85074 MAJESTIC WALK BLVD
FERNANDINA BEACH, FL 32034

2023

24-2N-27-0721-0062-0000

BUILDING CHARACTERISTICS

ELEMENT	CD	CONSTRUCTION
Exterior Wall	31	HARDIE BRD 100
Roof Structur	03	GABLE/HIP 100
Roof Cover	03	COMP SHNGL 100
Interior Wall	05	DRYWALL 100
Interior Floo	11	CLAY TILE 50
Interior Floo	14	CARPET 50
Air Condition	03	CENTRAL 100
Heating Type	04	AIR DUCTED 100
Bedrooms		6 100
Bathrooms		4 100
Frame	02	WOOD FRAME 100
Stories	2.	2. 100
Units		0 100
Occupancy	00	NONE 100
Quality	03	Quality Level 03

DOR CODE 0100 SINGLE FAMILY
MAP NUM | MKT AREA 04
NEIGHBORHOOD/LOC 4085.00

AREA TYPE	TOTAL GROSS AREA	PCT OF BASE	TOT ADJ AREA	SUBAREA MARKET VALUE
BAS	3,209	100	3,209	364,516
FGR	712	55	392	44,528
FOP	249	30	75	8,519
FSP	320	40	128	14,539
FUS	893	100	893	101,438
STR	56	10	6	681
TOTALS	5,439		4,703	534,222

MARKET ADJUSTMENTS

TYPE	MDL	EFF. AREA	TOT ADJ PTS	EFF. BASE RATE	REPL. COST NEW	AYB	EYB	ECON	FNCT		NORM	% COND
0900	01	4,703	97.6100	115.91	545,125	2017	2017	0	0	0	2.00	98.00

1 SNGL FAM – 100% - 2019 Heated Area: 4102 HX Base Yr 2019

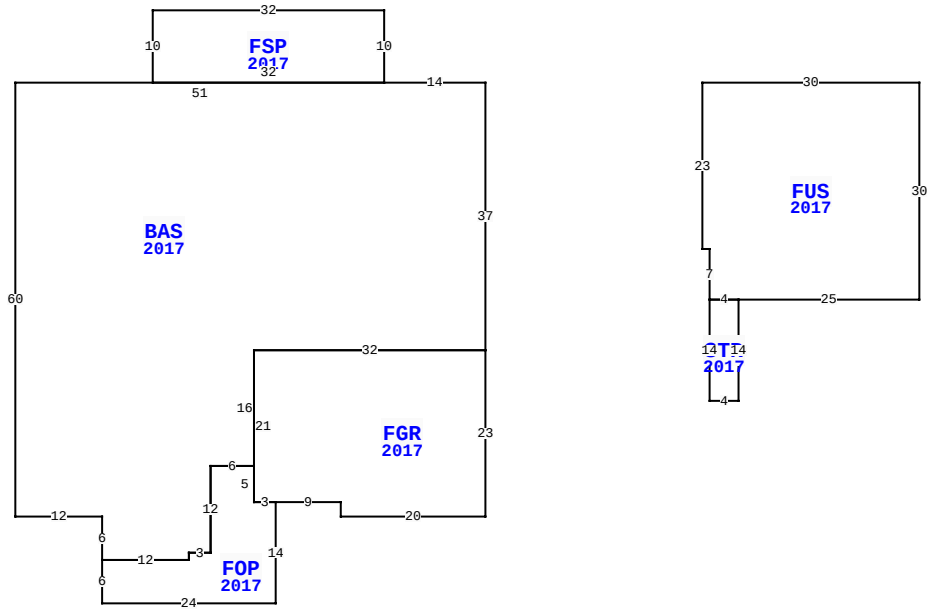

85074 MAJESTIC WALK BLVD, FERNANDINA BEACH

BLD DATE		LGL DATE	
XF DATE		LAND DATE	06/13/2023 MLU
INC DATE		AG DATE	

NASSAU COUNTY PROPERTY

PAGE 1 of 1 4

VALUATION SUMMARY

VALUATION BY		STANDARD
Tax Group: 4	Tax Dist:	
BUILDING MARKET VALUE		534,222
TOTAL MARKET OB/XF VALUE		17,654
TOTAL LAND VALUE - MARKET		75,000
TOTAL MARKET VALUE		626,876
SOH/AGL Deduction		370,246
ASSESSED VALUE		256,630
TOTAL EXEMPTION VALUE	HX HB	50,000
BASE TAXABLE VALUE		206,630
TOTAL JUST VALUE		626,876
NCON VALUE		0
INCOME VALUE		
PREVIOUS YEAR MKT VALUE		505,366

PERMIT NUM	DESCRIPTION	AMT	ISSUED
18000532	ADDITION	17,564	01/18/2018
17011580	CO ISSUED	0	12/29/2017
17006180	NEW CONSTR	513,732	07/11/2017

SALES DATA

OFF RECORD Number	DATE	TYPE INST	Q / U	V / I	RSN CD	SALE PRICE
2168/0904	12/29/2017	SW	Q	I	01	535,500
GRANTOR: AVH NORTH FLORIDA LLC						
GRANTEE: BOYCE CLARENCE D &						
2089/0966	12/16/2016	SW	U	V	37	6,730,600
GRANTOR: AW VENTURE II LLC						
GRANTEE: AVH NORTH FLORIDA L						

BUILDING NOTES

BUILDING DIMENSIONS

BAS=[YR=2017] W14 FSP=[YR=2017] N10 W32 S10 E32$ W51 S60 E12 S6 FOP=[YR=2017] S6 E24 N14 FGR=[YR=2017] E9 S2 E20 N23 W32 S21 E3$ W3 N5 W6 S12 W3 S1 W12$ E12 N1E3 N12 E6 N16 E32 N37$ PTR=[YR=2017] E30 FUS=[YR=2017] E30 S30 W25 STR=[YR=2017] S14 W4 N14 E4$ W4 N7 W1 N23$ W30$.

EXTRA FEATURES

LN	OB/XF CODE	DESCRIPTION	BLD	CAP	L	W	UNITS	UT	Adj R	ADJ UNIT PRICE	ORIG COND	YEAR ON	YEAR ACTUAL	Q	% COND	OB/XF MKT VALUE	NOTES
1	0855	CONC PAVER	0	100	0	0	1,820.00	SF	10.00	10.00	100	2017	2017	3	97	17,654	

LAND DESCRIPTION

TOTAL OB/XF 17,654

LN	USE CODE	CLS	LAND USE DESCRIPTION	CAP	RD	LOC ZONE	FRONT	DEPTH	TOT LND UTS	UNIT TYPE	DT	DPTH FACT	% COND	TOT ADJ	UNIT PRICE	ADJ UNIT PRICE	LAND VALUE	OTHER ADJUSTMENTS AND NOTES	YEAR	DENSITY	DECL	FRZ	YR	CONSRV
1	000133	C	SFR LAKE	100			0.00	0.00	1.00	LT		1.00	1.00	1.00	75,000.00	75,000.00	75,000							

REVIEW DATE 03/28/2018 BY SB Total Acres: 0.00 Total Land Value: 75,000 Market: 0 Agricultural: 0 Common: 75,000 PRINTED 08/02/2023 BY SYS