BLOCK 3 PT OF LOT 25
OR 724/1244 SEC 30-1N-25
2001 FLEE DW/MH

ROZBORA GEORGE S & NANCY V
43156 BLACK JACK RIDGE
CALLAHAN, FL 32011

2023

24-1N-24-0750-0003-0252

BUILDING CHARACTERISTICS

ELEMENT	CD	CONSTRUCTION
Exterior Wall	12	CEDAR 100
Roof Structur	08	IRREGULAR 100
Roof Cover	03	COMP SHNGL 100
Interior Wall	05	DRYWALL 100
Interior Floo	14	CARPET 60
Interior Floo	11	CLAY TILE 40
Air Condition	03	CENTRAL 100
Heating Type	04	AIR DUCTED 100
Bedrooms		4 100
Bathrooms		3 100
Frame	02	WOOD FRAME 100
Stories	2.	2. 100
Units		0 100
BUD8 Adjustme	06	DIST 1D 100
Occupancy	00	NONE 100
Quality	02	Quality Level 02

DOR CODE 0100 SINGLE FAMILY
MAP NUM | MKT AREA 08
NEIGHBORHOOD/LOC 8005.00

AREA TYPE	TOTAL GROSS AREA	PCT OF BASE	TOT ADJ AREA	SUBAREA MARKET VALUE
BAS	1,290	100	1,290	138,544
DCK	456	10	46	4,940
FGR	484	55	266	28,568
FOP	372	30	112	12,029
FSP	168	40	67	7,196
FST	70	55	38	4,081
FUS	968	100	968	103,962
TOTALS	3,808		2,787	299,320

MARKET ADJUSTMENTS

TYPE	MDL	EFF. AREA	TOT ADJ PTS	EFF. BASE RATE	REPL. COST NEW	AYB	EYB	ECON	FNCT		NORM	% COND
0900	01	2,787	109.6224	130.18	362,812	1987	1987	0	0	0	17.50	82.50

1 SNGL FAM – 100% - 1996 Heated Area: 2258 HX Base Yr 1996

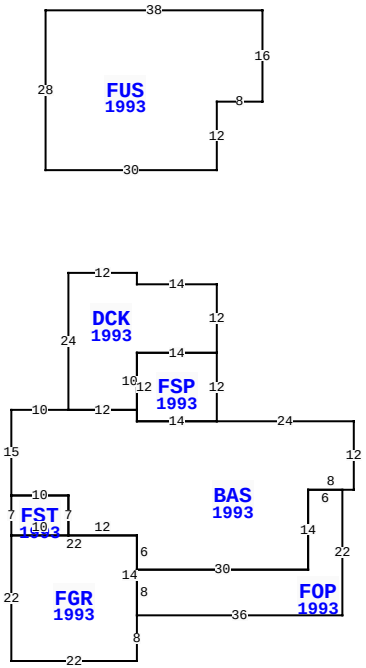

43156 BLACK JACK RDG, CALLAHAN

BLD DATE	03/03/2023 NW	LGL DATE	
XF DATE		LAND DATE	05/22/2023 MLU
INC DATE		AG DATE	

NASSAU COUNTY PROPERTY

PAGE 1 of 2 6

VALUATION SUMMARY

VALUATION BY		STANDARD
Tax Group: 6	Tax Dist:	
BUILDING MARKET VALUE		367,753
TOTAL MARKET OB/XF VALUE		13,754
TOTAL LAND VALUE - MARKET		107,680
TOTAL MARKET VALUE		489,187
SOH/AGL Deduction		230,344
ASSESSED VALUE		258,843
TOTAL EXEMPTION VALUE	HX HB	50,000
BASE TAXABLE VALUE		208,843
TOTAL JUST VALUE		489,187
NCON VALUE		0
INCOME VALUE		
PREVIOUS YEAR MKT VALUE		351,900

PERMIT NUM	DESCRIPTION	AMT	ISSUED
MH013462	MH MOVE-ON	0	04/01/2001
B99	GARAGE	12,240	10/01/1999

SALES DATA

OFF RECORD Number	DATE	TYPE INST	Q U	V I	RSN CD	SALE PRICE
0724/1244	2/28/1995	WD	Q	I		156,000

GRANTOR: BURNSED MIKE & TAMMIE
GRANTEE: ROZBORA GEORGE & NA

0458/0492	6/01/1985	QC	U	V		100

GRANTOR:
GRANTEE:

BUILDING NOTES

BUILDING DIMENSIONS

DCK=[YR=1993] W14 N2 W12 S24 BAS=[YR=1993] W10 S15 FST=[YR=1993] S7 FGR=[YR=1993] S22 E22 N8 FOP=[YR=1993] E36 N22 W6 S14 W30 S8 $ N14 W22 $ E10 N7 W10 $ E10 S7 E12 S6 E30 N14 E8 N12 W24 FSP=[YR=1993] N12 W14 S12 E14 $ W14 N2 W12 $ E12 N10 E14 N12 $ PTR= N20 FUS=[YR=1993] N12 E8 N16 W38 S28 E30 $ S20 $.

EXTRA FEATURES

LN	OB/XF CODE	DESCRIPTION	BLD	CAP	L	W	UNITS	UT	Adj R	ADJ UNIT PRICE	ORIG COND	YEAR ON	YEAR ACTUAL	Q	% COND	OB/XF MKT VALUE	NOTES
1	0812	CONCRETE C	0	100	0	0	1,515.00	SF	4.00	4.00	100	1987	1987	3	54.5	3,303	
2	0500	FP-PRE FAB	0	100	0	0	1.00	UT	3,500.00	3,500.00	100	1987	1987	3	64	2,240	
6	0510	GARAGE WD-	0	100	24	30	720.00	SF	35.00	35.00	100	1996	1996	3	25	6,300	
7	0681	POLE SHED	0	100	0	0	715.00	SF	9.90	9.90	100	1998	1998	3	27	1,911	

LAND DESCRIPTION

TOTAL OB/XF 13,754

LN	USE CODE	CLS	LAND USE DESCRIPTION	CAP	RD	LOC ZONE	FRONT	DEPTH	TOT LND UTS	UNIT TYPE	DT	DPTH FACT	% COND	TOT ADJ	UNIT PRICE	ADJ UNIT PRICE	LAND VALUE	OTHER ADJUSTMENTS AND NOTES	YEAR	DENSITY	DECL	FRZ	YR	CONSRV
1	000115	C	SFR ACRES	100	0007	OR	0.00	0.00	6.73	AC		1.00	1.00	1.00	16,000.00	16,000.00	107,680							

REVIEW DATE 09/27/2018 BY TWA Total Acres: 6.73 Total Land Value: 107,680 Market: 0 Agricultural: 0 Common: 107,680 PRINTED 08/02/2023 BY SYS

BLOCK 3 PT OF LOT 25
OR 724/1244 SEC 30-1N-25
2001 FLEE DW/MH

ROZBORA GEORGE S & NANCY V
43156 BLACK JACK RIDGE
CALLAHAN, FL 32011

2023

24-1N-24-0750-0003-0252

BUILDING CHARACTERISTICS

ELEMENT	CD	CONSTRUCTION
Exterior Wall	30	VINYL 100
Roof Structur	03	GABLE/HIP 100
Roof Cover	03	COMP SHNGL 100
Interior Wall	05	DRYWALL 100
Interior Floo	14	CARPET 70
Interior Floo	08	SHT VINYL 30
Air Condition	03	CENTRAL 100
Heating Type	04	AIR DUCTED 100
Bedrooms		3 100
Bathrooms		2 100
Frame	02	WOOD FRAME 100
Stories	1.	1. 100
Units		0 100
Quality	03	Quality Level 03
DOR CODE	0100	SINGLE FAMILY
MAP NUM		MKT AREA 08
NEIGHBORHOOD/LOC	8005.00	

AREA TYPE	TOTAL GROSS AREA	PCT OF BASE	TOT ADJ AREA	SUBAREA MARKET VALUE
BAS	1,512	100	1,512	61,811
FSP	270	60	162	6,623
TOTALS	1,782		1,674	68,433

MARKET ADJUSTMENTS

TYPE	MDL	EFF. AREA	TOT ADJ PTS	EFF. BASE RATE	REPL. COST NEW	AYB	EYB	ECON	FNCT		NORM	% COND
0800	02	1,674	116.8000	81.76	136,866	2001	2001	0	0	0	50.00	50.00

2 M/H 94+ – 0% - 1996 Heated Area: 1512 HX Base Yr 1996

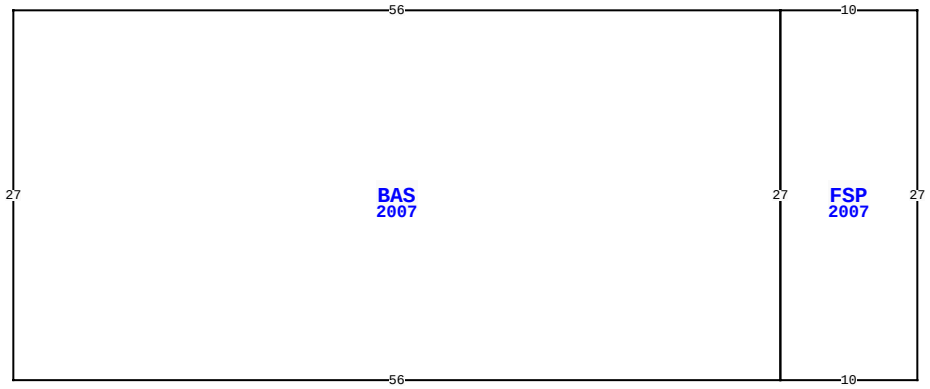

43156 BLACK JACK RDG, CALLAHAN

BLD DATE	03/03/2023 NW	LGL DATE	
XF DATE		LAND DATE	05/22/2023 MLU
INC DATE		AG DATE	

NASSAU COUNTY PROPERTY

PAGE 2 of 2 6

VALUATION SUMMARY

VALUATION BY		STANDARD
Tax Group: 6	Tax Dist:	
BUILDING MARKET VALUE		367,753
TOTAL MARKET OB/XF VALUE		13,754
TOTAL LAND VALUE - MARKET		107,680
TOTAL MARKET VALUE		489,187
SOH/AGL Deduction		230,344
ASSESSED VALUE		258,843
TOTAL EXEMPTION VALUE	HX HB	50,000
BASE TAXABLE VALUE		208,843
TOTAL JUST VALUE		489,187
NCON VALUE		0
INCOME VALUE		
PREVIOUS YEAR MKT VALUE		351,900

PERMIT NUM	DESCRIPTION	AMT	ISSUED

SALES DATA

OFF RECORD Number	DATE	TYPE INST	Q / U	V / I	RSN CD	SALE PRICE
0724/1244	2/28/1995	WD	Q	I		156,000
GRANTOR: BURNSED MIKE & TAMMIE						
GRANTEE: ROZBORA GEORGE & NA						
0458/0492	6/01/1985	QC	U	V		100
GRANTOR:						
GRANTEE:						

BUILDING NOTES

BUILDING DIMENSIONS

FSP=[YR=2007] W10 BAS=[YR=2007] W56 S27 E56 N27$ S27 E10 N27$.

EXTRA FEATURES

L N	OB/XF CODE	DESCRIPTION	BLD	CAP	L	W	UNITS	UT	Adj R	ADJ UNIT PRICE	ORIG COND	YEAR ON	YEAR ACTUAL	Q	% COND	OB/XF MKT VALUE	NOTES

LAND DESCRIPTION

TOTAL OB/XF 0

L N	USE CODE	CLS	LAND USE DESCRIPTION	CAP	R D	LOC ZONE	FRONT	DEPTH	TOT LND UTS	UNIT TYPE	D T	DPTH FACT	% COND	TOT ADJ	UNIT PRICE	ADJ UNIT PRICE	LAND VALUE	OTHER ADJUSTMENTS AND NOTES	YEAR	DENSITY	DECL	FRZ	YR	CONSRV

REVIEW DATE 09/27/2018 BY TWA Total Acres: 6.73 Total Land Value: 107,680 Market: 0 Agricultural: 0 Common: 107,680 PRINTED 08/02/2023 BY SYS