LOT 47
SOUTHERN PINES OR 2476/315

DAVIS LORENZO & CLARISSA
36485 SHORTLEAF AVE
HILLIARD, FL 32046

2023

23-3N-24-3300-0047-0000

BUILDING CHARACTERISTICS

ELEMENT	CD	CONSTRUCTION
Exterior Wall	31	HARDIE BRD 90
Exterior Wall	21	STONE 10
Roof Structur	08	IRREGULAR 100
Roof Cover	03	COMP SHNGL 100
Interior Wall	05	DRYWALL 100
Interior Floo	12	HARDWOOD 70
Interior Floo	11	CLAY TILE 30
Air Condition	03	CENTRAL 100
Heating Type	04	AIR DUCTED 100
Bedrooms		4 100
Bathrooms		4 100
Frame	02	WOOD FRAME 100
Stories	0	0 100
Units		0 100
Occupancy	00	NONE 100
Quality	04	Quality Level 04
DOR CODE	0100	SINGLE FAMILY
MAP NUM		MKT AREA 09
NEIGHBORHOOD/LOC	9016.00	

AREA TYPE	TOTAL GROSS AREA	PCT OF BASE	TOT ADJ AREA	SUBAREA MARKET VALUE
BAS	3,412	100	3,412	428,946
FGR	714	55	393	49,407
FOP	146	30	44	5,531
FOP	244	30	73	9,177
FUS	608	100	608	76,436
STR	52	10	5	629
TOTALS	5,176		4,535	570,127

MARKET ADJUSTMENTS

TYPE	MDL	EFF. AREA	TOT ADJ PTS	EFF. BASE RATE	REPL. COST NEW	AYB	EYB	ECON	FNCT		NORM	% COND
0900	01	4,535	105.9219	125.78	570,412	2021	2021	0	0	0	0.05	99.95

1 SNGL FAM – 0% - 0 Heated Area: 4020 HX Base Yr

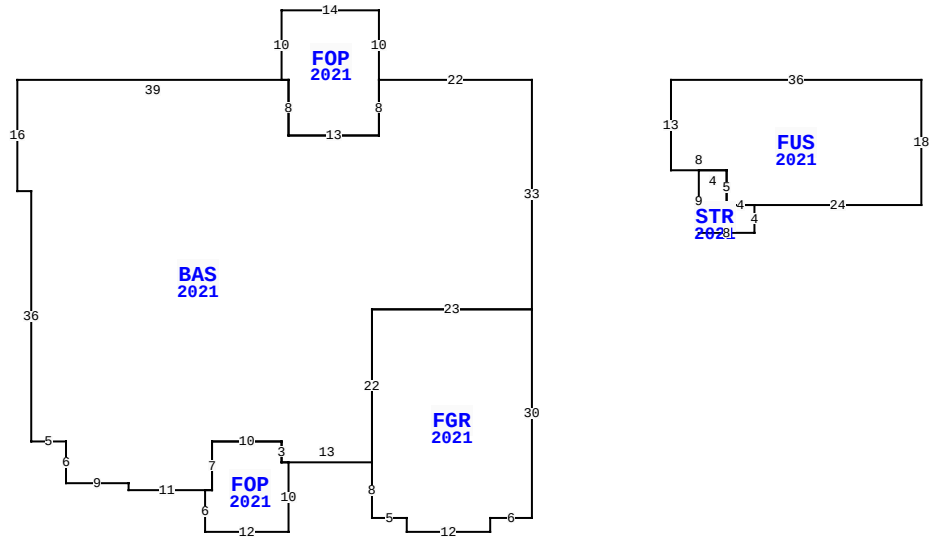

36485 SHORTLEAF AVE, HILLIARD

BLD DATE		LGL DATE	
XF DATE		LAND DATE	
INC DATE		AG DATE	

NASSAU COUNTY PROPERTY

PAGE 1 of 1 4

VALUATION SUMMARY

VALUATION BY	STANDARD
Tax Group: 4	Tax Dist:
BUILDING MARKET VALUE	570,127
TOTAL MARKET OB/XF VALUE	9,861
TOTAL LAND VALUE - MARKET	60,000
TOTAL MARKET VALUE	639,988
SOH/AGL Deduction	0
ASSESSED VALUE	639,988
TOTAL EXEMPTION VALUE	0
BASE TAXABLE VALUE	639,988
TOTAL JUST VALUE	639,988
NCON VALUE	0
INCOME VALUE	
PREVIOUS YEAR MKT VALUE	618,716

PERMIT NUM	DESCRIPTION	AMT	ISSUED
21012552	CO ISSUED	0	09/20/2021
21004116	NEW CONSTR	566,657	04/05/2021

SALES DATA

OFF RECORD Number	DATE	TYPE INST	Q / U	V / I	RSN CD	SALE PRICE
2526/0798	12/28/2021	SW	Q	I	01	654,900

GRANTOR: LGI HOMES-FLORIDA LLC
GRANTEE: DAVIS LORENZO & CLA

BUILDING NOTES

BUILDING DIMENSIONS

BAS=[YR=2021] W22 FOP=[YR=2021] N10 W14 S10 E1 S8 E13 N8$ S8 W13 N8 W39 S16 E2 S36 E5 S6 E9 S1 E11 FOP=[YR=2021] S6 E12 N10 W1 N3 W10 S7 W1$ E1 N7 E10 S3 E13 FGR=[YR=2021] S8 E5 S2 E12 N2 E6 N30 W23 S22$ N22 E23 N33$ PTR=E20 FUS=[YR=2021] E36 S18 W24 STR=[YR=2021] S4 W8 N9 E4 S5 E4$ W4 N5 W8 N13$ W20$.

EXTRA FEATURES

L N	OB/XF CODE	DESCRIPTION	BLD	CAP	L	W	UNITS	UT	Adj R	ADJ UNIT PRICE	ORIG COND	YEAR ON	YEAR ACTUAL	Q	% COND	OB/XF MKT VALUE	NOTES
1	0812	CONCRETE C	0	0	0	0	1,859.00	SF	4.00	4.00	100	2021	2021	3	100	7,436	
2	0600	SUMMER KIT	0	0	0	0	1.00	UT	2,500.00	2,500.00	100	2021	2021	3	97	2,425	

LAND DESCRIPTION

TOTAL OB/XF 9,861

L N	USE CODE	CLS	LAND USE DESCRIPTION	CAP	R D	LOC ZONE	FRONT	DEPTH	TOT LND UTS	UNIT TYPE	D T	DPTH FACT	% COND	TOT ADJ	UNIT PRICE	ADJ UNIT PRICE	LAND VALUE	OTHER ADJUSTMENTS AND NOTES	YEAR	DENSITY	DECL	FRZ	YR	CONSRV
1	000134	C	SFR POND	0		OR	0.00	0.00	1.00	LT		1.00	1.00	1.00	60,000.00	60,000.00	60,000							

REVIEW DATE 10/12/2021 BY TW Total Acres: 0.00 Total Land Value: 60,000 Market: 0 Agricultural: 0 Common: 60,000 PRINTED 08/02/2023 BY SYS