PT OF NW1/4 OF NE1/4
IN OR 2033/1979

RAINS CHRISTOPHER T
4522 RIVER ROAD
HILLIARD, FL 32046

2023

23-2N-23-0000-0002-0050

NASSAU COUNTY PROPERTY

BUILDING CHARACTERISTICS

ELEMENT	CD	CONSTRUCTION
Exterior Wall	12	CEDAR 100
Roof Structur	08	IRREGULAR 100
Roof Cover	03	COMP SHNGL 100
Interior Wall	05	DRYWALL 100
Interior Floo	14	CARPET 70
Interior Floo	08	SHT VINYL 30
Air Condition	03	CENTRAL 100
Heating Type	04	AIR DUCTED 100
Bedrooms		4 100
Bathrooms		2 100
Frame	02	WOOD FRAME 100
Stories	1.5	1.5 100
Units		0 100
Occupancy	00	NONE 100
Quality	03	Quality Level 03

DOR CODE	0100	SINGLE FAMILY	
MAP NUM		MKT AREA	09
NEIGHBORHOOD/LOC	9003.00		

AREA TYPE	TOTAL GROSS AREA	PCT OF BASE	TOT ADJ AREA	SUBAREA MARKET VALUE
BAS	1,236	100	1,236	102,236
BAS	441	100	441	36,477
FOP	12	30	4	331
FOP	35	30	10	827
FSP	550	40	220	18,197
FST	60	55	33	2,730
FUS	432	100	432	35,733
TOTALS	2,766		2,376	196,531

MARKET ADJUSTMENTS

TYPE	MDL	EFF. AREA	TOT ADJ PTS	EFF. BASE RATE	REPL. COST NEW	AYB	EYB	ECON	FNCT		NORM	% COND
0100	01	2,376	109.7600	99.06	235,367	1989	1989	0	0	0	16.50	83.50

1 SINGLE FAM – 100% - 2017 Heated Area: 2109 HX Base Yr 2017

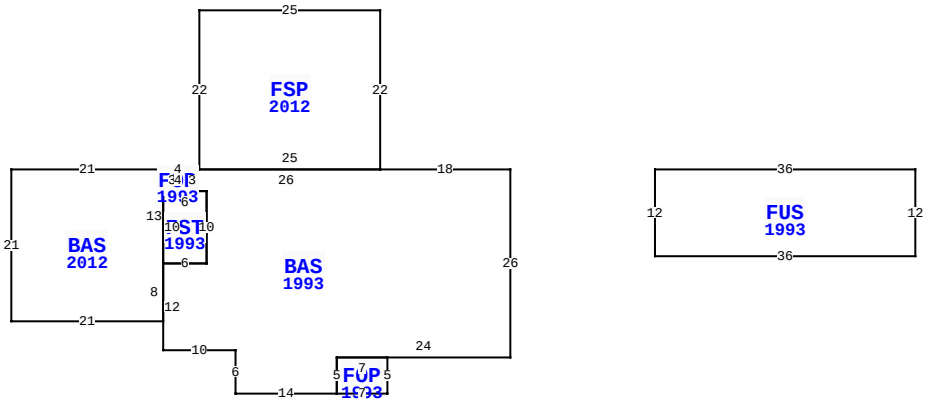

4522 RIVER RD, HILLIARD

BLD DATE		LGL DATE	
XF DATE		LAND DATE	06/16/2023 MLU
INC DATE		AG DATE	

VALUATION SUMMARY

VALUATION BY		STANDARD
Tax Group: 6	Tax Dist:	
BUILDING MARKET VALUE		196,531
TOTAL MARKET OB/XF VALUE		2,366
TOTAL LAND VALUE - MARKET		104,000
TOTAL MARKET VALUE		302,897
SOH/AGL Deduction		132,363
ASSESSED VALUE		170,534
TOTAL EXEMPTION VALUE	HX HB VX	55,000
BASE TAXABLE VALUE		115,534
TOTAL JUST VALUE		302,897
NCON VALUE		0
INCOME VALUE		
PREVIOUS YEAR MKT VALUE		229,324

PERMIT NUM	DESCRIPTION	AMT	ISSUED
3415	NEW CONSTR	0	02/27/1989
4395	N/A	64,837	09/28/1987

SALES DATA

OFF RECORD Number	DATE	TYPE INST	Q / U	V / I	RSN CD	SALE PRICE
2033/1979	3/11/2016	WD	Q	I	05	205,000
GRANTOR: DEW WILLIAM H JR & MA						
GRANTEE: RAINS CHRISTOPHER T						
0807/0587	9/23/1997	WD	Q	I		89,900
GRANTOR: BEACH JOHN A & BETTY						
GRANTEE: DEW WILLIAM JR & MA						

BUILDING NOTES

BUILDING DIMENSIONS

BAS=[YR=1993] W18 FSP=[YR=2012] N22 W25 S22 E25$ W26
FOP=[YR=1993] W4 BAS=[YR=2012] W21 S21 E21 N8 FST=[YR=1993]
E6 N10 W6 S10$ N13$ S3 E4 N3$ S3 E2 S10 W6 S12 E10 S6 E14
FOP=[YR=1993] E7 N5 W7 S5$ N5 E24 N26$ PTR=E20 FUS=[YR=1993]
E36 S12 W36 N12$ W20$.

EXTRA FEATURES

LN	OB/XF CODE	DESCRIPTION	BLD	CAP	L	W	UNITS	UT	Adj R	ADJ UNIT PRICE	ORIG COND	YEAR ON	YEAR ACTUAL	Q	% COND	OB/XF MKT VALUE	NOTES
2	0504	FP-ELECTRI	0	100	0	0	1.00	UT	2,000.00	2,000.00	100	1989	1989	3	68	1,360	
5	0810	CONCRETE A	0	100	0	0	196.00	SF	6.50	6.50	100	1999	1999	3	79	1,006	

LAND DESCRIPTION

TOTAL OB/XF 2,366

LN	USE CODE	CLS	LAND USE DESCRIPTION	CAP	RD	LOC ZONE	FRONT	DEPTH	TOT LND UTS	UNIT TYPE	DT	DPTH FACT	% COND	TOT ADJ	UNIT PRICE	ADJ UNIT PRICE	LAND VALUE	OTHER ADJUSTMENTS AND NOTES	YEAR	DENSITY	DECL	FRZ	YR	CONSRV
1	000115	C	SFR ACRES	100	0004	OR	0.00	0.00	4.16	AC		1.00	1.00	1.00	25,000.00	25,000.00	104,000							

REVIEW DATE 09/11/2019 BY TW Total Acres: 4.16 Total Land Value: 104,000 Market: 0 Agricultural: 0 Common: 104,000 PRINTED 08/02/2023 BY SYS