PT LOT 1278 & 1293
LYING NORTH OF MEADOWS LANE
IN OR 2093/1112

EDDY JOHN J & HEATHER G
33261 MEADOWS LN
CALLAHAN, FL 32011

2023

23-1N-24-2180-1278-0010

NASSAU COUNTY PROPERTY

BUILDING CHARACTERISTICS

ELEMENT	CD	CONSTRUCTION
Exterior Wall	10	ABOVE AVG 90
Exterior Wall	20	FACE BRICK 10
Roof Structur	08	IRREGULAR 100
Roof Cover	03	COMP SHNGL 100
Interior Wall	05	DRYWALL 100
Interior Floo	12	HARDWOOD 60
Interior Floo	11	CLAY TILE 40
Air Condition	03	CENTRAL 100
Heating Type	04	AIR DUCTED 100
Bedrooms		4 100
Bathrooms		2.5 100
Frame	02	WOOD FRAME 100
Stories	0	0 100
Units		0 100
Occupancy	00	NONE 100
Quality	02	Quality Level 02
DOR CODE	0100	SINGLE FAMILY
MAP NUM		MKT AREA 08
NEIGHBORHOOD/LOC	8005.00	

AREA TYPE	TOTAL GROSS AREA	PCT OF BASE	TOT ADJ AREA	SUBAREA MARKET VALUE
BAS	2,502	100	2,502	296,762
BAS	569	100	569	67,489
FCP	850	25	212	25,145
FOP	348	30	104	12,335
FOP	60	30	18	2,135
FSP	144	40	58	6,880
TOTALS	4,473		3,463	410,747

MARKET ADJUSTMENTS

TYPE	MDL	EFF. AREA	TOT ADJ PTS	EFF. BASE RATE	REPL. COST NEW	AYB	EYB	ECON	FNCT		NORM	% COND
0900	01	3,463	101.5588	120.60	417,638	2017	2018	0	0	0	1.65	98.35

1 SNGL FAM – 100% - 2018 Heated Area: 3071 HX Base Yr 2018

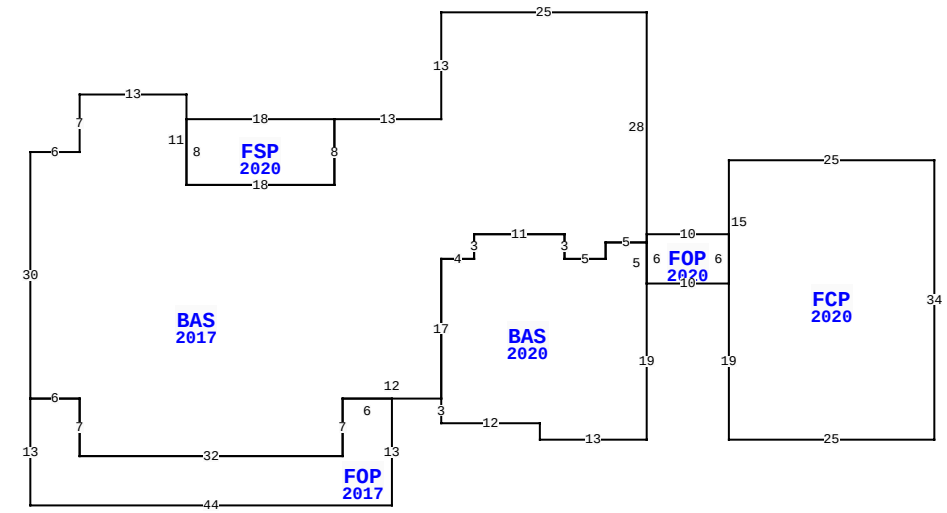

33261 MEADOWS LN, CALLAHAN

BLD DATE		LGL DATE	
XF DATE		LAND DATE	05/22/2023 MLU
INC DATE		AG DATE	

NASSAU COUNTY PROPERTY — VALUATION SUMMARY

VALUATION BY		STANDARD
Tax Group: 6	Tax Dist:	
BUILDING MARKET VALUE		422,128
TOTAL MARKET OB/XF VALUE		8,847
TOTAL LAND VALUE - MARKET		80,320
TOTAL MARKET VALUE		511,295
SOH/AGL Deduction		93,397
ASSESSED VALUE		417,898
TOTAL EXEMPTION VALUE	HX HB	50,000
BASE TAXABLE VALUE		367,898
TOTAL JUST VALUE		511,295
NCON VALUE		0
INCOME VALUE		
PREVIOUS YEAR MKT VALUE		456,316

PERMIT NUM	DESCRIPTION	AMT	ISSUED
20006908	CARPORT	22,580	08/04/2020
17009106	CO ISSUED	0	10/16/2017
1702041	NEW CONSTR	332,924	03/29/2017

SALES DATA

OFF RECORD Number	DATE	TYPE INST	Q U	V I	RSN CD	SALE PRICE
2093/1112	12/27/2016	QC	U	V	11	100

GRANTOR: WILSON WESLEY G SR

GRANTEE: EDDY JOHN J & HEATH

BUILDING NOTES

BUILDING DIMENSIONS

BAS=[YR=2017] W25 S13 W13 FSP=[YR=2020] W18 S8 E18 N8$ S8 W18 N11 W13 S7 W6 S30 FOP=[YR=2017] S13 E44 N13 W6 S7 W32 N7 W6$ E6 S7 E32 N7 E12 BAS=[YR=2020] S3 E12 S2 E13 N19 FOP=[YR=2020] E10 FCP=[YR=2020] S19 E25 N34 W25 S15$ N6 W10 S6$ N5 W5 S2 W5 N3 W11 S3 W4 S17$ N17E4 N3 E11 S3 E5 N2 E5 N28$.

EXTRA FEATURES

LN	OB/XF CODE	DESCRIPTION	BLD	CAP	L	W	UNITS	UT	Adj R	ADJ UNIT PRICE	ORIG COND	YEAR ON	YEAR ACTUAL	Q	% COND	OB/XF MKT VALUE	NOTES
1	0812	CONCRETE C	0	100	0	0	1,068.00	SF	4.00	4.00	100	2017	2017	3	97	4,144	
2	0810	CONCRETE A	0	100	31	13	403.00	SF	6.50	6.50	100	2017	2017	3	97	2,541	
3	0810	CONCRETE A	0	100	24	14	336.00	SF	6.50	6.50	100	2019	2019	3	99	2,162	

LAND DESCRIPTION

TOTAL OB/XF 8,847

LN	USE CODE	CLS	LAND USE DESCRIPTION	CAP	RD	LOC ZONE	FRONT	DEPTH	TOT LND UTS	UNIT TYPE	DT	DPTH FACT	% COND	TOT ADJ	UNIT PRICE	ADJ UNIT PRICE	LAND VALUE	OTHER ADJUSTMENTS AND NOTES	YEAR	DENSITY	DECL	FRZ	YR	CONSRV
1	000115	C	SFR ACRES	100			0.00	0.00	5.02	AC		1.00	1.00	1.00	16,000.00	16,000.00	80,320							

REVIEW DATE 02/05/2021 BY TW Total Acres: 5.02 Total Land Value: 80,320 Market: 0 Agricultural: 0 Common: 80,320 PRINTED 08/02/2023 BY SYS

PT LOT 1278 & 1293
LYING NORTH OF MEADOWS LANE
IN OR 2093/1112

EDDY JOHN J & HEATHER G
33261 MEADOWS LN
CALLAHAN, FL 32011

2023

23-1N-24-2180-1278-0010

NASSAU COUNTY PROPERTY

BUILDING CHARACTERISTICS

ELEMENT	CD	CONSTRUCTION
Exterior Wall	25	MOD METAL 100
Roof Structur	03	GABLE/HIP 100
Roof Cover	12	MODULAR MT 100
Interior Wall		N/A 100
Interior Floo	03	CONC FINSH 100
Air Condition	99	N/A 100
Heating Type		N/A 100
Bedrooms		0 100
Bathrooms		0 100
Frame	05	STEEL 100
Stories	0	0 100
Units		0 100
Occupancy	00	NONE 100
Quality	06	Quality Level 06

DOR CODE 0100 SINGLE FAMILY
MAP NUM | MKT AREA 08
NEIGHBORHOOD/LOC 8005.00

AREA TYPE	TOTAL GROSS AREA	PCT OF BASE	TOT ADJ AREA	SUBAREA MARKET VALUE
BAS	576	100	576	11,381
TOTALS	576		576	11,381

MARKET ADJUSTMENTS

TYPE	MDL	EFF. AREA	TOT ADJ PTS	EFF. BASE RATE	REPL. COST NEW	AYB	EYB	ECON	FNCT		NORM	% COND
6500	01	576	58.1900	20.37	11,733	2019	2019	0	0	0	3.00	97.00

2 GARAGE RES – 100% - 2018 Heated Area: 576 HX Base Yr 2018

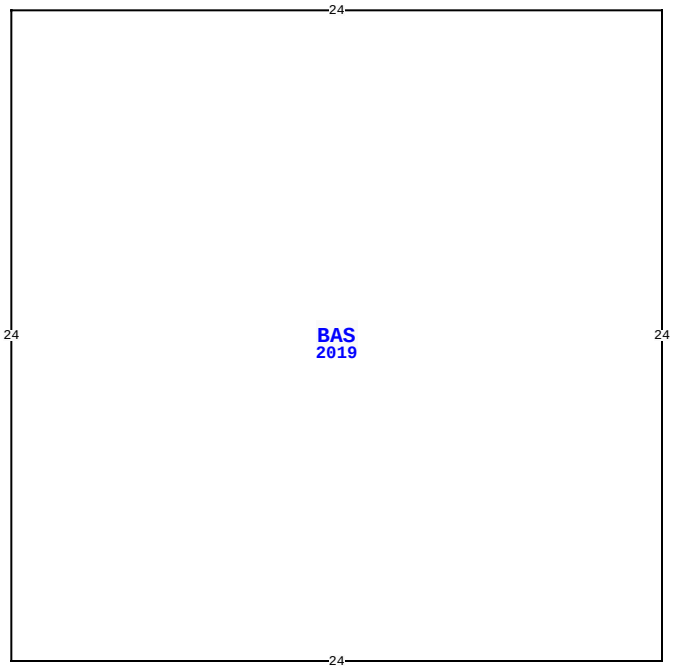

33261 MEADOWS LN, CALLAHAN

BLD DATE		LGL DATE	05/22/2023 MLU
XF DATE		LAND DATE	
INC DATE		AG DATE	

VALUATION SUMMARY

VALUATION BY		STANDARD
Tax Group: 6	Tax Dist:	
BUILDING MARKET VALUE		422,128
TOTAL MARKET OB/XF VALUE		8,847
TOTAL LAND VALUE - MARKET		80,320
TOTAL MARKET VALUE		511,295
SOH/AGL Deduction		93,397
ASSESSED VALUE		417,898
TOTAL EXEMPTION VALUE	HX HB	50,000
BASE TAXABLE VALUE		367,898
TOTAL JUST VALUE		511,295
NCON VALUE		0
INCOME VALUE		
PREVIOUS YEAR MKT VALUE		456,316

PERMIT NUM	DESCRIPTION	AMT	ISSUED

SALES DATA

OFF RECORD Number	DATE	TYPE INST	Q / U	V / I	RSN CD	SALE PRICE
2093/1112	12/27/2016	QC	U	V	11	100

GRANTOR: WILSON WESLEY G SR
GRANTEE: EDDY JOHN J & HEATH

BUILDING NOTES

BUILDING DIMENSIONS

BAS=[YR=2019] W24 S24 E24 N24$.

EXTRA FEATURES

L N	OB/XF CODE	DESCRIPTION	BLD	CAP	L	W	UNITS	UT	Adj R	ADJ UNIT PRICE	ORIG COND	YEAR ON	YEAR ACTUAL	Q	% COND	OB/XF MKT VALUE	NOTES

LAND DESCRIPTION

TOTAL OB/XF 0

L N	USE CODE	CLS	LAND USE DESCRIPTION	CAP	R D	LOC ZONE	FRONT	DEPTH	TOT LND UTS	UNIT TYPE	D T	DPTH FACT	% COND	TOT ADJ	UNIT PRICE	ADJ UNIT PRICE	LAND VALUE	OTHER ADJUSTMENTS AND NOTES	YEAR	DENSITY	DECL	FRZ	YR	CONSRV

REVIEW DATE 02/05/2021 BY TW Total Acres: 5.02 Total Land Value: 80,320 Market: 0 Agricultural: 0 Common: 80,320 PRINTED 08/02/2023 BY SYS