PT LOT 10
IN OR 2467/826
DUNNS SURVEY DBK B-10

RIVERLAND LOGGING INC
552391 US HWY 1
HILLIARD, FL 32046

2023

22-3N-24-2320-0010-0040

BUILDING CHARACTERISTICS

ELEMENT	CD	CONSTRUCTION
Exterior Wall	03	BELOW AVG. 50
Exterior Wall	05	AVERAGE 50
Roof Structur	01	FLAT 100
Roof Cover	04	BUILT-UP 100
Interior Wall	03	PLASTER 50
Interior Wall	04	PLYWOOD 50
Interior Floo	08	SHT VINYL 50
Interior Floo	14	CARPET 50
Air Condition	01	NONE 100
Heating Type	03	FORCED AIR 100
Bedrooms		2 100
Bathrooms		1 100
Frame	02	WOOD FRAME 100
Common Wall		15 100
Stories	1.	1. 100
Units		0 100
BUD8 Adjustme	04	DIST 01 100
Occupancy	OO	OWNER OCC 100
Quality	03	Quality Level 03
DOR CODE	1200	STORE/OFFICE/RESID
MAP NUM		MKT AREA 09
NEIGHBORHOOD/LOC	9002.00	

AREA TYPE	TOTAL GROSS AREA	PCT OF BASE	TOT ADJ AREA	SUBAREA MARKET VALUE
BAS	2,680	100	2,680	60,322
FOP	248	30	74	1,666
PTO	200	5	10	225
UOP	224	20	45	1,013
TOTALS	3,352		2,809	63,226

MARKET ADJUSTMENTS

TYPE	MDL	EFF. AREA	TOT ADJ PTS	EFF. BASE RATE	REPL. COST NEW	AYB	EYB	ECON	FNCT	AP	NORM	% COND
0100	01	2,809	75.3000	67.96	190,900	1960	1960	0	0	30	36.88	33.12

1 SINGLE FAM – 0% - 0 Heated Area: 2680 HX Base Yr

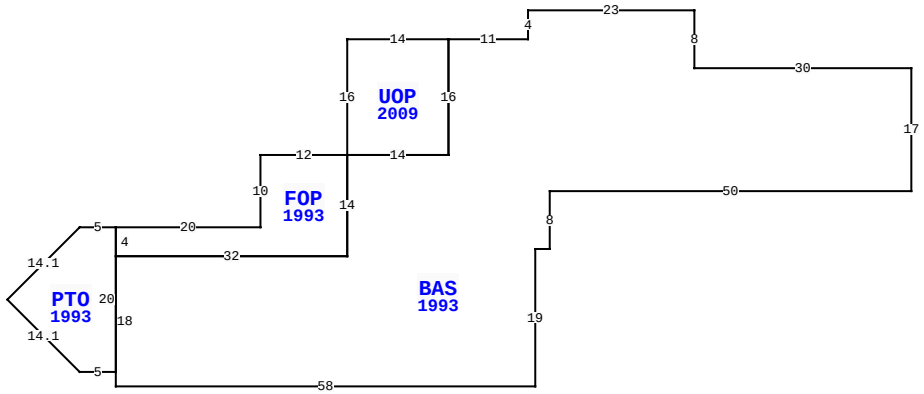

550644 US HWY 1, HILLIARD

BLD DATE	07/12/2021 KK	LGL DATE	
XF DATE	07/12/2021 KK	LAND DATE	07/12/2021 KK
INC DATE		AG DATE	

NASSAU COUNTY PROPERTY

PAGE 1 of 3 4

VALUATION SUMMARY

VALUATION BY	STANDARD
Tax Group: 4	Tax Dist:
BUILDING MARKET VALUE	241,380
TOTAL MARKET OB/XF VALUE	49,912
TOTAL LAND VALUE - MARKET	101,541
TOTAL MARKET VALUE	392,833
SOH/AGL Deduction	61,010
ASSESSED VALUE	331,823
TOTAL EXEMPTION VALUE	0
BASE TAXABLE VALUE	331,823
TOTAL JUST VALUE	392,833
NCON VALUE	0
INCOME VALUE	
PREVIOUS YEAR MKT VALUE	301,657

PERMIT NUM	DESCRIPTION	AMT	ISSUED
E21280	ELEC OTHER	0	09/01/2008

SALES DATA

OFF RECORD Number	DATE	TYPE INST	Q U	V I	RSN CD	SALE PRICE
2467/0826	5/25/2021	WD	Q	I	01	325,000
GRANTOR: TAYLOR PAUL DAVID						
GRANTEE: RIVERLAND LOGGING I						
2467/0824	5/10/2021	QC	U	I	11	100
GRANTOR: THOMPSON KENNETH LEE						
GRANTEE: TAYLOR PAUL DAVID						

BUILDING NOTES

BUILDING DIMENSIONS

BAS=[YR=1993] W30 N8 W23 S4 W11 UOP=[YR=2009] W14 S16 E14 N16$ S16 W14 FOP=[YR=1993] W12 S10 W20 PTO=[YR=1993] W5 D10 L10 D10 R10 E5 N20$ S4 E32 N14$ S14 W32 S18 E58 N19 E2 N8 E50 N17$.

EXTRA FEATURES

LN	OB/XF CODE	DESCRIPTION	BLD	CAP	L	W	UNITS	UT	Adj R	ADJ UNIT PRICE	ORIG COND	YEAR ON	YEAR ACTUAL	Q	% COND	OB/XF MKT VALUE	NOTES
7	0450	PREFAB FNC	0	0	0	0	115.00	LF	8.00	8.00	100	2013	2013	3	65	598	
8	0810	CONCRETE A	0	0	0	0	179.00	SF	6.50	6.50	100	2005	2005	3	87	1,012	
10	0450	PREFAB FNC	0	0	0	0	224.00	LF	8.00	8.00	100	2013	2013	3	65	1,165	
11	0450	PREFAB FNC	0	0	0	0	353.00	LF	8.00	8.00	100	2013	2013	3	65	1,836	
12	0803	ASPHALT C	0	0	0	0	4,480.00	SF	2.00	2.00	40	1965	1965	3	20	1,792	
13	0812	CONCRETE C	0	0	55	17	935.00	SF	4.00	4.00	100	1970	1970	3	22	823	
14	0812	CONCRETE C	0	0	48	20	960.00	SF	4.00	4.00	100	2010	2010	3	92	3,533	
15	0810	CONCRETE A	0	0	0	0	264.00	SF	6.50	6.50	100	1965	1965	3	20	343	
16	0446	BOX FNC 6'	0	0	0	0	158.00	LF	20.00	20.00	100	2005	2005	3	27	853	
17	0467	FNC GT 25'	0	0	0	0	1.00	UT	700.00	700.00	100	2005	2005	3	69	483	

TOTAL OB/XF 12,438

LAND DESCRIPTION

LN	USE CODE	CLS	LAND USE DESCRIPTION	CAP	RD	LOC ZONE	FRONT	DEPTH	TOT LND UTS	UNIT TYPE	DT	DPTH FACT	% COND	TOT ADJ	UNIT PRICE	ADJ UNIT PRICE	LAND VALUE	OTHER ADJUSTMENTS AND NOTES	YEAR	DENSITY	DECL	FRZ	YR	CONSRV
1	001200	C	STORE COMB	0	0004	CG	0.00	0.00	101,541.36	SF		1.00	1.00	1.00	1.00	1.00	101,541							

REVIEW DATE 07/12/2021 BY KK Total Acres: 0.00 Total Land Value: 101,541 Market: 0 Agricultural: 0 Common: 101,541 PRINTED 08/02/2023 BY SYS

PT LOT 10
IN OR 2467/826
DUNNS SURVEY DBK B-10

RIVERLAND LOGGING INC
552391 US HWY 1
HILLIARD, FL 32046

2023

22-3N-24-2320-0010-0040

BUILDING CHARACTERISTICS

ELEMENT	CD	CONSTRUCTION
Exterior Wall	05	AVERAGE 50
Exterior Wall	25	MOD METAL 50
Roof Structur	02	SHED 100
Roof Cover	02	ROLL COMP 100
Interior Wall	07	NONE 100
Interior Floo	03	CONC FINSH 100
Ceiling	04	NONE 100
Air Condition	01	NONE 100
Heating Type	01	NONE 100
Fixtures		0 100
Frame	02	WOOD FRAME 100
Common Wall		20 100
Story Height		10 100
RMS		0 100
Stories	1.	1. 100
Units		0 100
Occupancy	00	NONE 100
Quality	03	Quality Level 03
DOR CODE	1200	STORE/OFFICE/RESID
MAP NUM		MKT AREA 09
NEIGHBORHOOD/LOC	9002.00	

AREA TYPE	TOTAL GROSS AREA	PCT OF BASE	TOT ADJ AREA	SUBAREA MARKET VALUE
BAS	3,480	100	3,480	118,150
CAN	600	30	180	6,111
TOTALS	4,080		3,660	124,262

MARKET ADJUSTMENTS

TYPE	MDL	EFF. AREA	TOT ADJ PTS	EFF. BASE RATE	REPL. COST NEW	AYB	EYB	ECON	FNCT		NORM	% COND
1101	04	3,660	37.3787	54.76	200,422	1970	1990	0	0	0	38.00	62.00

3 RETAILSTOR – 0% - 0 Heated Area: 3480 HX Base Yr

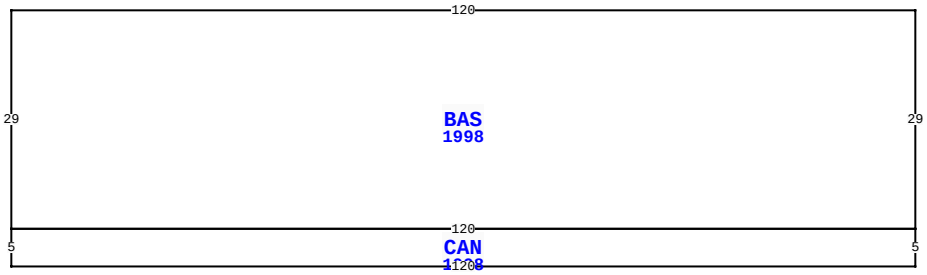

550644 US HWY 1, HILLIARD

BLD DATE	07/12/2021 KK	LGL DATE	
XF DATE	07/12/2021 KK	LAND DATE	07/12/2021 KK
INC DATE		AG DATE	

NASSAU COUNTY PROPERTY

PAGE 2 of 3 4

VALUATION SUMMARY

VALUATION BY	STANDARD
Tax Group: 4	Tax Dist:
BUILDING MARKET VALUE	241,380
TOTAL MARKET OB/XF VALUE	49,912
TOTAL LAND VALUE - MARKET	101,541
TOTAL MARKET VALUE	392,833
SOH/AGL Deduction	61,010
ASSESSED VALUE	331,823
TOTAL EXEMPTION VALUE	0
BASE TAXABLE VALUE	331,823
TOTAL JUST VALUE	392,833
NCON VALUE	0
INCOME VALUE	
PREVIOUS YEAR MKT VALUE	301,657

PERMIT NUM	DESCRIPTION	AMT	ISSUED

SALES DATA

OFF RECORD Number	DATE	TYPE INST	Q / U	V / I	RSN CD	SALE PRICE
2467/0826	5/25/2021	WD	Q	I	01	325,000
GRANTOR: TAYLOR PAUL DAVID						
GRANTEE: RIVERLAND LOGGING I						
2467/0824	5/10/2021	QC	U	I	11	100
GRANTOR: THOMPSON KENNETH LEE						
GRANTEE: TAYLOR PAUL DAVID						

BUILDING NOTES

BUILDING DIMENSIONS

BAS=[YR=1998] W120 S29 CAN=[YR=1998] S5 E120 N5 W120$ E120 N29$.

EXTRA FEATURES

LN	OB/XF CODE	DESCRIPTION	BLD	CAP	L	W	UNITS	UT	Adj R	ADJ UNIT PRICE	ORIG COND	YEAR ON	YEAR ACTUAL	Q	% COND	OB/XF MKT VALUE	NOTES
18	0510	GARAGE WD-	0	0	48	30	1,440.00	SF	35.00	35.00	100	2011	2011	3	68	34,272	
19	0350	CARPORT WD	0	0	30	13	390.00	SF	13.00	13.00	100	2012	2012	3	60	3,042	
20	6001	ROLLUP DR	0	0	0	0	2.00	UT	400.00	400.00	100	1990	1990	3	20	160	

LAND DESCRIPTION

TOTAL OB/XF 37,474

LN	USE CODE	CLS	LAND USE DESCRIPTION	CAP	RD	LOC ZONE	FRONT	DEPTH	TOT LND UTS	UNIT TYPE	DT	DPTH FACT	% COND	TOT ADJ	UNIT PRICE	ADJ UNIT PRICE	LAND VALUE	OTHER ADJUSTMENTS AND NOTES	YEAR	DENSITY	DECL	FRZ	YR	CONSRV

REVIEW DATE 07/12/2021 BY KK Total Acres: 0.00 Total Land Value: 101,541 Market: 0 Agricultural: 0 Common: 101,541 PRINTED 08/02/2023 BY SYS

PT LOT 10
IN OR 2467/826
DUNNS SURVEY DBK B-10

RIVERLAND LOGGING INC
552391 US HWY 1
HILLIARD, FL 32046

2023

22-3N-24-2320-0010-0040

BUILDING CHARACTERISTICS

ELEMENT	CD	CONSTRUCTION
Exterior Wall	05	AVERAGE 50
Exterior Wall	15	CONC BLOCK 50
Roof Structur	01	FLAT 100
Roof Cover	02	ROLL COMP 100
Interior Wall	01	MINIMUM 100
Interior Floo	03	CONC FINSH 100
Ceiling	02	F.NOT SUS 100
Air Condition	01	NONE 100
Heating Type	01	NONE 100
Fixtures		3 100
Frame	03	MASONRY 100
Story Height		12 100
RMS		4 100
Stories	1.	1. 100
Units		0 100
BUD8 Adjustme	04	DIST 01 100
Occupancy	00	NONE 100
Quality	03	Quality Level 03
DOR CODE	1200	STORE/OFFICE/RESID
MAP NUM		MKT AREA 09
NEIGHBORHOOD/LOC	9002.00	

AREA TYPE	TOTAL GROSS AREA	PCT OF BASE	TOT ADJ AREA	SUBAREA MARKET VALUE
AOF	294	100	294	10,556
AOF	154	100	154	5,529
BAS	896	100	896	32,170
UST	392	40	157	5,637
TOTALS	1,736		1,501	53,892

MARKET ADJUSTMENTS

TYPE	MDL	EFF. AREA	TOT ADJ PTS	EFF. BASE RATE	REPL. COST NEW	AYB	EYB	ECON	FNCT		NORM	% COND
2501	04	1,501	65.6250	57.91	86,923	1965	1990	0	0	0	38.00	62.00

4 SERV SHOP – 0% - 0 Heated Area: 1344 HX Base Yr

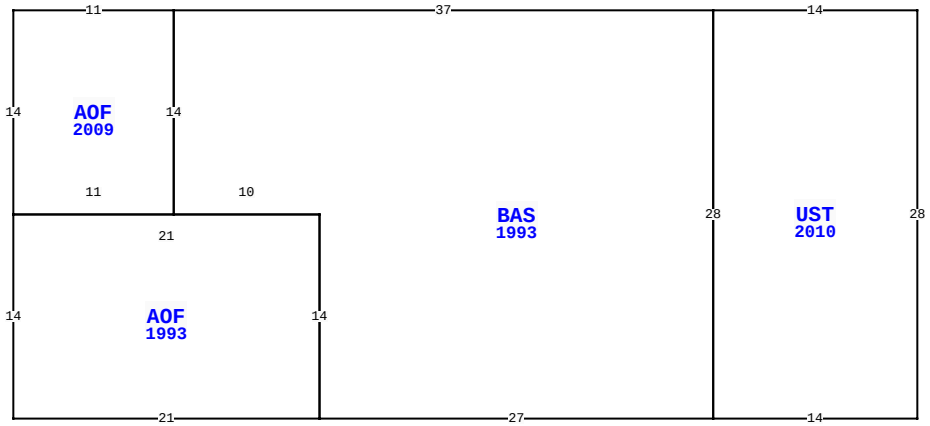

550644 US HWY 1, HILLIARD

BLD DATE	07/12/2021	KK	LGL DATE	
XF DATE	07/12/2021	KK	LAND DATE	07/12/2021 KK
INC DATE			AG DATE	

NASSAU COUNTY PROPERTY

PAGE 3 of 3 4

VALUATION SUMMARY

VALUATION BY	STANDARD
Tax Group: 4	Tax Dist:
BUILDING MARKET VALUE	241,380
TOTAL MARKET OB/XF VALUE	49,912
TOTAL LAND VALUE - MARKET	101,541
TOTAL MARKET VALUE	392,833
SOH/AGL Deduction	61,010
ASSESSED VALUE	331,823
TOTAL EXEMPTION VALUE	0
BASE TAXABLE VALUE	331,823
TOTAL JUST VALUE	392,833
NCON VALUE	0
INCOME VALUE	
PREVIOUS YEAR MKT VALUE	301,657

PERMIT NUM	DESCRIPTION	AMT	ISSUED

SALES DATA

OFF RECORD Number	DATE	TYPE INST	Q / U	V / I	RSN CD	SALE PRICE
2467/0826	5/25/2021	WD	Q	I	01	325,000
GRANTOR: TAYLOR PAUL DAVID						
GRANTEE: RIVERLAND LOGGING I						
2467/0824	5/10/2021	QC	U	I	11	100
GRANTOR: THOMPSON KENNETH LEE						
GRANTEE: TAYLOR PAUL DAVID						

BUILDING NOTES

BUILDING DIMENSIONS

UST=[YR=2010] W14 BAS=[YR=1993] W37 AOF=[YR=2009] W11 S14 AOF=[YR=1993] S14 E21 N14 W21$ E11 N14$ S14 E10 S14 E27 N28$ S28 E14 N28$.

EXTRA FEATURES

LN	OB/XF CODE	DESCRIPTION	BLD	CAP	L	W	UNITS	UT	Adj R	ADJ UNIT PRICE	ORIG COND	YEAR ON	YEAR ACTUAL	Q	% COND	OB/XF MKT VALUE	NOTES

LAND DESCRIPTION

TOTAL OB/XF 0

LN	USE CODE	CLS	LAND USE DESCRIPTION	CAP	RD	LOC ZONE	FRONT	DEPTH	TOT LND UTS	UNIT TYPE	DT	DPTH FACT	% COND	TOT ADJ	UNIT PRICE	ADJ UNIT PRICE	LAND VALUE	OTHER ADJUSTMENTS AND NOTES	YEAR	DENSITY	DECL	FRZ	YR	CONSRV

REVIEW DATE 07/12/2021 BY KK Total Acres: 0.00 Total Land Value: 101,541 Market: 0 Agricultural: 0 Common: 101,541 PRINTED 08/02/2023 BY SYS