LOT 16
IN OR 2069/353
NORTH DEERWOOD EST PB 6/173

BRADDOCK KATHRYN & RONALD JR
45447 AMERICAN DREAM DR
CALLAHAN, FL 32011

2023

22-2N-25-1460-0016-0000

NASSAU COUNTY PROPERTY

BUILDING CHARACTERISTICS

ELEMENT	CD	CONSTRUCTION
Exterior Wall	16	WD FR STUC 90
Exterior Wall	20	FACE BRICK 10
Roof Structur	03	GABLE/HIP 100
Roof Cover	03	COMP SHNGL 90
Roof Cover	12	MODULAR MT 10
Interior Wall	05	DRYWALL 100
Interior Floo	12	HARDWOOD 80
Interior Floo	14	CARPET 20
Air Condition	03	CENTRAL 100
Heating Type	04	AIR DUCTED 100
Bedrooms		3 100
Bathrooms		2.5 100
Frame	02	WOOD FRAME 100
Stories	2.	2. 100
Units		0 100
Occupancy	00	NONE 100
Quality	03	Quality Level 03

DOR CODE	0100 SINGLE FAMILY		
MAP NUM		MKT AREA	08
NEIGHBORHOOD/LOC	8018.00		

AREA TYPE	TOTAL GROSS AREA	PCT OF BASE	TOT ADJ AREA	SUBAREA MARKET VALUE
BAS	2,890	100	2,890	332,925
FGR	736	55	405	46,655
FOP	256	30	77	8,871
FOP	452	30	136	15,667
FUS	0	100	0	0
FUS	344	100	344	39,628
STP	20	10	2	230
STR	56	10	6	691
TOTALS	4,754		3,860	444,668

MARKET ADJUSTMENTS

TYPE	MDL	EFF. AREA	TOT ADJ PTS	EFF. BASE RATE	REPL. COST NEW	AYB	EYB	ECON	FNCT		NORM	% COND
0900	01	3,860	99.0900	117.67	454,206	2018	2018	0	0	0	2.10	97.90

1 SNGL FAM – 100% - 2019 Heated Area: 3234 HX Base Yr 2019

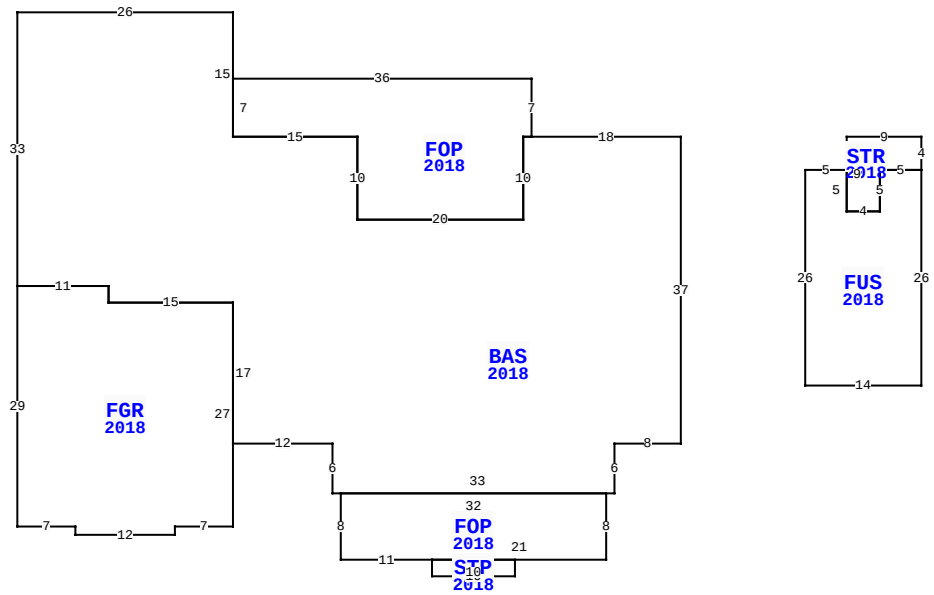

45447 AMERICAN DREAM DR, CALLAHAN

BLD DATE		LGL DATE	
XF DATE		LAND DATE	
INC DATE		AG DATE	

NASSAU COUNTY PROPERTY — VALUATION SUMMARY

VALUATION BY		STANDARD
Tax Group: 6	Tax Dist:	
BUILDING MARKET VALUE		444,668
TOTAL MARKET OB/XF VALUE		82,166
TOTAL LAND VALUE - MARKET		60,000
TOTAL MARKET VALUE		586,834
SOH/AGL Deduction		146,632
ASSESSED VALUE		440,202
TOTAL EXEMPTION VALUE	HX HB	50,000
BASE TAXABLE VALUE		390,202
TOTAL JUST VALUE		586,834
NCON VALUE		72,488
INCOME VALUE		
PREVIOUS YEAR MKT VALUE		402,378

PERMIT NUM	DESCRIPTION	AMT	ISSUED
21000884	SWIM POOL	71,540	01/26/2021
18011328	CO ISSUED	0	11/13/2018
C8000719	NEW CONSTR	416,802	03/01/2018

SALES DATA

OFF RECORD Number	DATE	TYPE INST	Q U	V I	RSN CD	SALE PRICE
2069/0353	8/26/2016	SW	Q	V	01	64,000
GRANTOR: SYNOVUS BANK						
GRANTEE: BRADDOCK KATHRYN &						
2047/1158	5/23/2016	CT	U	I	18	170,000
GRANTOR: CLERK OF COURT						
GRANTEE: SYNOVUS BANK						

BUILDING NOTES

BUILDING DIMENSIONS

BAS=[YR=2018] W18 FOP=[YR=2018] N7 W36 S7 E15 S10 E20 N10 E1$ W1 S10 W20 N10 W15 N15 W26 S33 FGR=[YR=2018] S29 E7 S1 E12 N1 E7 N27 W15 N2 W11$ E11 S2 E15 S17 E12 S6 E1 FOP=[YR=2018] S8 E11 STP=[YR=2018] S2 E10 N2 W10$ E21 N8 W32$E33 N6 E8 N37$ PTR=E20 FUS=[YR=2018] STR=[YR=2018] E9 S4 FUS=[YR=2018] S26 W14 N26 E5 S5 E4 N5 E5$ W5 S5 W4 N9 $.

EXTRA FEATURES

LN	OB/XF CODE	DESCRIPTION	BLD	CAP	L	W	UNITS	UT	Adj R	ADJ UNIT PRICE	ORIG COND	YEAR ON	YEAR ACTUAL	Q	% COND	OB/XF MKT VALUE	NOTES
1	0812	CONCRETE C	0	100	0	0	2,469.00	SF	4.00	4.00	100	2018	2018	3	98	9,678	
2	0861	POOL GUNIT	0	100	32	16	548.00	SF	85.00	85.00	100	2022	2022	3	100	46,580	
3	0855	CONC PAVER	0	100	0	0	1,390.00	SF	10.00	10.00	100	2022	2022	3	100	13,900	
4	0476	VF 6 SBPL	0	100	0	0	144.00	LF	32.00	32.00	100	2022	2022	3	100	4,608	
5	0462	ST/AL FNC	0	100	0	0	440.00	SF	10.00	10.00	100	2022	2022	3	100	4,400	
6	0877	JACUZZI	0	100	0	0	1.00	UT	1,000.00	1,000.00	100	2022	2022	3	100	1,000	
7	0871	POOL HTR R	0	100	0	0	1.00	UT	2,000.00	2,000.00	100	2022	2022	3	100	2,000	

LAND DESCRIPTION

TOTAL OB/XF 82,166

LN	USE CODE	CLS	LAND USE DESCRIPTION	CAP	RD	LOC ZONE	FRONT	DEPTH	TOT LND UTS	UNIT TYPE	DT	DPTH FACT	% COND	TOT ADJ	UNIT PRICE	ADJ UNIT PRICE	LAND VALUE	OTHER ADJUSTMENTS AND NOTES	YEAR	DENSITY	DECL	FRZ	YR	CONSRV
1	000100	C	SFR	100			0.00	0.00	1.00	LT		1.00	1.00	1.00	60,000.00	60,000.00	60,000							

REVIEW DATE 07/20/2021 BY KB Total Acres: 0.00 Total Land Value: 60,000 Market: 0 Agricultural: 0 Common: 60,000 PRINTED 08/02/2023 BY SYS