LOT 9
IN OR 1058/934
NORTH DEERWOOD EST PB 6/173

LEE CHARLES D JR & KELLIE A
45312 AMERICAN DREAM DRIVE
CALLAHAN, FL 32011

**2023**

**22-2N-25-1460-0009-0000**

## BUILDING CHARACTERISTICS

| ELEMENT | CD | CONSTRUCTION |
|---|---|---|
| Exterior Wall | 20 | FACE BRICK 90 |
| Exterior Wall | 05 | AVERAGE 10 |
| Roof Structur | 03 | GABLE/HIP 100 |
| Roof Cover | 03 | COMP SHNGL 100 |
| Interior Wall | 05 | DRYWALL 100 |
| Interior Floo | 14 | CARPET 60 |
| Interior Floo | 11 | CLAY TILE 40 |
| Air Condition | 03 | CENTRAL 100 |
| Heating Type | 04 | AIR DUCTED 100 |
| Bedrooms | | 4 100 |
| Bathrooms | | 2.5 100 |
| Frame | 02 | WOOD FRAME 100 |
| Stories | 2. | 2. 100 |
| Units | | 0 100 |
| Occupancy | 00 | NONE 100 |
| Quality | 03 | Quality Level 03 |
| DOR CODE | 0100 | SINGLE FAMILY |
| MAP NUM | | MKT AREA 08 |
| NEIGHBORHOOD/LOC | 8018.00 | |

| AREA TYPE | TOTAL GROSS AREA | PCT OF BASE | TOT ADJ AREA | SUBAREA MARKET VALUE |
|---|---|---|---|---|
| BAS | 1,929 | 100 | 1,929 | 205,163 |
| FGR | 812 | 55 | 447 | 47,542 |
| FOP | 355 | 30 | 106 | 11,274 |
| FOP | 435 | 30 | 130 | 13,827 |
| FUS | 646 | 100 | 646 | 68,707 |
| STP | 33 | 10 | 3 | 319 |
| TOTALS | 4,210 | | 3,261 | 346,832 |

## MARKET ADJUSTMENTS

| TYPE | MDL | EFF. AREA | TOT ADJ PTS | EFF. BASE RATE | REPL. COST NEW | AYB | EYB | ECON | FNCT | | NORM | % COND |
|---|---|---|---|---|---|---|---|---|---|---|---|---|
| 0900 | 01 | 3,261 | 102.9480 | 122.25 | 398,657 | 2004 | 2004 | 0 | 0 | 0 | 13.00 | 87.00 |

1 SNGL FAM – 100% - 2005 Heated Area: 2575 HX Base Yr 2005

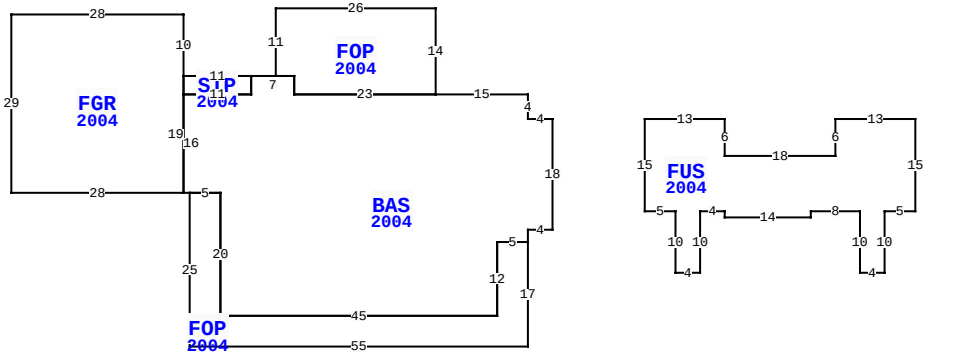


45312 AMERICAN DREAM DR, CALLAHAN

| | | | |
|---|---|---|---|
| BLD DATE | | LGL DATE | |
| XF DATE | | LAND DATE | |
| INC DATE | | AG DATE | |

## NASSAU COUNTY PROPERTY

PAGE 1 of 2 6

### VALUATION SUMMARY

| | | |
|---|---|---|
| VALUATION BY | | STANDARD |
| Tax Group: 6 | Tax Dist: | |
| BUILDING MARKET VALUE | | 376,700 |
| TOTAL MARKET OB/XF VALUE | | 52,775 |
| TOTAL LAND VALUE - MARKET | | 60,000 |
| TOTAL MARKET VALUE | | 489,475 |
| SOH/AGL Deduction | | 222,718 |
| ASSESSED VALUE | | 266,757 |
| TOTAL EXEMPTION VALUE | HX HB | 50,000 |
| BASE TAXABLE VALUE | | 216,757 |
| TOTAL JUST VALUE | | 489,475 |
| NCON VALUE | | 0 |
| INCOME VALUE | | |
| PREVIOUS YEAR MKT VALUE | | 387,143 |

| PERMIT NUM | DESCRIPTION | AMT | ISSUED |
|---|---|---|---|
| 2001606 | GARAGE | 50,715 | 02/21/2020 |
| P7386 | NEW CONSTR | 0 | 12/01/2003 |
| B11774 | NEW CONSTR | 195,248 | 10/02/2003 |

## SALES DATA

| OFF RECORD Number | DATE | TYPE INST | Q / U | V / I | RSN CD | SALE PRICE |
|---|---|---|---|---|---|---|
| 1058/0934 | 5/29/2002 | WD | Q | V | | 40,900 |

GRANTOR: ADR INVESTMENTS LTD

GRANTEE: LEE CHARLES D JR &

## BUILDING NOTES

## BUILDING DIMENSIONS

BAS=[YR=2004] W4 N4 W15 FOP=[YR=2004] N14 W26 S11 E3 S3 E23 $ W23 N3 W7 STP=[YR=2004] W11 FGR=[YR=2004] N10 W28 S29 E28 N19 $ S3 E11 N3 $ S3 W11 S16 E1 FOP=[YR=2004] S25 E55 N17 W5 S12 W45 N20 W5 $ E5 S20 E45 N12 E5 N2 E4 N18 $ PTR= E15 FUS=[YR=2004] E13 S6 E18 N6 E13 S15 W5 S10 W4 N10 W8 S1 W14 N1 W4 S10 W4 N10 W5 N15 $ W15 $.

## EXTRA FEATURES

| LN | OB/XF CODE | DESCRIPTION | BLD | CAP | L | W | UNITS | UT | Adj R | ADJ UNIT PRICE | ORIG COND | YEAR ON | YEAR ACTUAL | Q | % COND | OB/XF MKT VALUE | NOTES |
|---|---|---|---|---|---|---|---|---|---|---|---|---|---|---|---|---|---|
| 1 | 0500 | FP-PRE FAB | 0 | 100 | 0 | 0 | 1.00 | UT | 3,500.00 | 3,500.00 | 100 | 2004 | 2004 | 3 | 89 | 3,115 | |
| 2 | 0812 | CONCRETE C | 0 | 100 | 0 | 0 | 3,072.00 | SF | 4.00 | 4.00 | 100 | 2004 | 2004 | 3 | 86 | 10,568 | |
| 3 | 0861 | POOL GUNIT | 0 | 100 | 0 | 0 | 420.00 | SF | 85.00 | 85.00 | 100 | 2011 | 2011 | 3 | 68 | 24,276 | |
| 4 | 0855 | CONC PAVER | 0 | 100 | 0 | 0 | 934.00 | SF | 10.00 | 10.00 | 100 | 2011 | 2011 | 3 | 93 | 8,686 | |
| 5 | 0462 | ST/AL FNC | 0 | 100 | 0 | 0 | 504.00 | SF | 10.00 | 10.00 | 100 | 2011 | 2011 | 3 | 68 | 3,427 | |
| 6 | 0810 | CONCRETE A | 0 | 100 | 20 | 21 | 420.00 | SF | 6.50 | 6.50 | 100 | 2020 | 2020 | 3 | 99 | 2,703 | |

## LAND DESCRIPTION

TOTAL OB/XF 52,775

| LN | USE CODE | CLS | LAND USE DESCRIPTION | CAP | RD | LOC ZONE | FRONT | DEPTH | TOT LND UTS | UNIT TYPE | DT | DPTH FACT | % COND | TOT ADJ | UNIT PRICE | ADJ UNIT PRICE | LAND VALUE | OTHER ADJUSTMENTS AND NOTES | YEAR | DENSITY | DECL | FRZ | YR | CONSRV |
|---|---|---|---|---|---|---|---|---|---|---|---|---|---|---|---|---|---|---|---|---|---|---|---|---|
| 1 | 000100 | C | SFR | 100 | 0006 | | 0.00 | 0.00 | 1.00 | LT | | 1.00 | 1.00 | 1.00 | 60,000.00 | 60,000.00 | 60,000 | | | | | | | |

REVIEW DATE 01/07/2021 BY KB Total Acres: 0.00 Total Land Value: 60,000 Market: 0 Agricultural: 0 Common: 60,000 PRINTED 08/02/2023 BY SYS

LOT 9
IN OR 1058/934
NORTH DEERWOOD EST PB 6/173

LEE CHARLES D JR & KELLIE A
45312 AMERICAN DREAM DRIVE
CALLAHAN, FL 32011

**2023**

**22-2N-25-1460-0009-0000**

## NASSAU COUNTY PROPERTY



## BUILDING CHARACTERISTICS

| ELEMENT | CD | CONSTRUCTION |
|---|---|---|
| Exterior Wall | 20 | FACE BRICK 100 |
| Roof Structur | 03 | GABLE/HIP 100 |
| Roof Cover | 03 | COMP SHNGL 100 |
| Interior Wall | 01 | MINIMUM 100 |
| Interior Floo | 03 | CONC FINSH 100 |
| Air Condition | 01 | NONE 100 |
| Heating Type | 01 | NONE 100 |
| Bedrooms | | 0 100 |
| Bathrooms | | 0 100 |
| Frame | 02 | WOOD FRAME 100 |
| Stories | 1. | 1. 100 |
| Units | | 0 100 |
| Occupancy | 00 | NONE 100 |
| Quality | 06 | Quality Level 06 |

| | | | |
|---|---|---|---|
| DOR CODE | 0100 | SINGLE FAMILY | |
| MAP NUM | | MKT AREA | 08 |
| NEIGHBORHOOD/LOC | 8018.00 | | |

| AREA TYPE | TOTAL GROSS AREA | PCT OF BASE | TOT ADJ AREA | SUBAREA MARKET VALUE |
|---|---|---|---|---|
| BAS | 1,116 | 100 | 1,116 | 29,868 |
| TOTALS | 1,116 | | 1,116 | 29,868 |

## MARKET ADJUSTMENTS

| TYPE | MDL | EFF. AREA | TOT ADJ PTS | EFF. BASE RATE | REPL. COST NEW | AYB | EYB | ECON | FNCT | | NORM | % COND |
|---|---|---|---|---|---|---|---|---|---|---|---|---|
| 6500 | 01 | 1,116 | 78.0160 | 27.31 | 30,478 | 2020 | 2020 | 0 | 0 | 0 | 2.00 | 98.00 |

2 GARAGE RES – 100% - 2005 Heated Area: 1116 HX Base Yr 2005

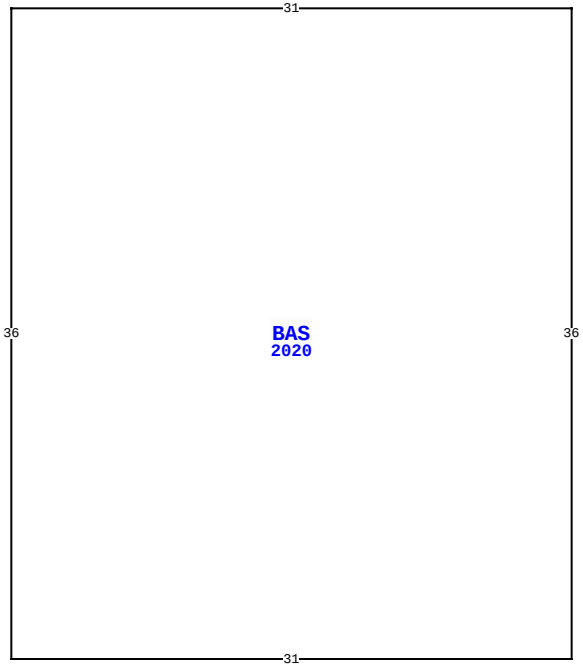


45312 AMERICAN DREAM DR, CALLAHAN

| | | | |
|---|---|---|---|
| BLD DATE | | LGL DATE | |
| XF DATE | | LAND DATE | |
| INC DATE | | AG DATE | |

## VALUATION SUMMARY

| | | |
|---|---|---|
| VALUATION BY | | STANDARD |
| Tax Group: 6 | Tax Dist: | |
| BUILDING MARKET VALUE | | 376,700 |
| TOTAL MARKET OB/XF VALUE | | 52,775 |
| TOTAL LAND VALUE - MARKET | | 60,000 |
| TOTAL MARKET VALUE | | 489,475 |
| SOH/AGL Deduction | | 222,718 |
| ASSESSED VALUE | | 266,757 |
| TOTAL EXEMPTION VALUE | HX HB | 50,000 |
| BASE TAXABLE VALUE | | 216,757 |
| TOTAL JUST VALUE | | 489,475 |
| NCON VALUE | | 0 |
| INCOME VALUE | | |
| PREVIOUS YEAR MKT VALUE | | 387,143 |

| PERMIT NUM | DESCRIPTION | AMT | ISSUED |
|---|---|---|---|

## SALES DATA

| OFF RECORD Number | DATE | TYPE INST | Q U / | V I / | RSN CD | SALE PRICE |
|---|---|---|---|---|---|---|
| 1058/0934 | 5/29/2002 | WD | Q | V | | 40,900 |

GRANTOR: ADR INVESTMENTS LTD
GRANTEE: LEE CHARLES D JR &

## BUILDING NOTES

## BUILDING DIMENSIONS

BAS=[YR=2020] W31 S36 E31 N36$.

## EXTRA FEATURES

| L N | OB/XF CODE | DESCRIPTION | BLD | CAP | L | W | UNITS | UT | Adj R | ADJ UNIT PRICE | ORIG COND | YEAR ON | YEAR ACTUAL | Q | % COND | OB/XF MKT VALUE | NOTES |
|---|---|---|---|---|---|---|---|---|---|---|---|---|---|---|---|---|---|

## LAND DESCRIPTION

TOTAL OB/XF 0

| L N | USE CODE | CLS | LAND USE DESCRIPTION | CAP | R D | LOC ZONE | FRONT | DEPTH | TOT LND UTS | UNIT TYPE | D T | DPTH FACT | % COND | TOT ADJ | UNIT PRICE | ADJ UNIT PRICE | LAND VALUE | OTHER ADJUSTMENTS AND NOTES | YEAR | DENSITY | DECL | FRZ | YR | CONSRV |
|---|---|---|---|---|---|---|---|---|---|---|---|---|---|---|---|---|---|---|---|---|---|---|---|---|

REVIEW DATE 01/07/2021 BY KB Total Acres: 0.00 Total Land Value: 60,000 Market: 0 Agricultural: 0 Common: 60,000 PRINTED 08/02/2023 BY SYS