PT OF LOTS 33 & 34
OR 216/462
CORNWALL SURVEY

HOBBS HANK W
371718 HENRY SMITH ROAD
HILLIARD, FL 32046

2023

20-3N-24-2020-0033-0040

BUILDING CHARACTERISTICS

ELEMENT	CD	CONSTRUCTION
Exterior Wall	15	CONC BLOCK 100
Roof Structur	03	GABLE/HIP 100
Roof Cover	12	MODULAR MT 100
Interior Wall	04	PLYWOOD 50
Interior Wall	05	DRYWALL 50
Interior Floo	14	CARPET 100
Air Condition	03	CENTRAL 100
Heating Type	04	AIR DUCTED 100
Bedrooms		3 100
Bathrooms		1 100
Frame	03	MASONRY 100
Stories	1.	1. 100
Units		0 100
BUD8 Adjustme	04	DIST 01 100
Occupancy	00	NONE 100
Quality	03	Quality Level 03
DOR CODE	0100	SINGLE FAMILY
MAP NUM		MKT AREA 09
NEIGHBORHOOD/LOC	9001.00	

AREA TYPE	TOTAL GROSS AREA	PCT OF BASE	TOT ADJ AREA	SUBAREA MARKET VALUE
BAS	1,500	100	1,500	107,674
FCP	400	25	100	7,178
UCP	240	20	48	3,446
UOP	35	20	7	503
UOP	96	20	19	1,364
UOP	96	20	19	1,364
TOTALS	2,367		1,693	121,528

MARKET ADJUSTMENTS

TYPE	MDL	EFF. AREA	TOT ADJ PTS	EFF. BASE RATE	REPL. COST NEW	AYB	EYB	ECON	FNCT		NORM	% COND
0100	01	1,693	97.0000	87.54	148,205	1981	1986	0	0	0	18.00	82.00

1 SINGLE FAM – 100% - 0 Heated Area: 1500 HX Base Yr

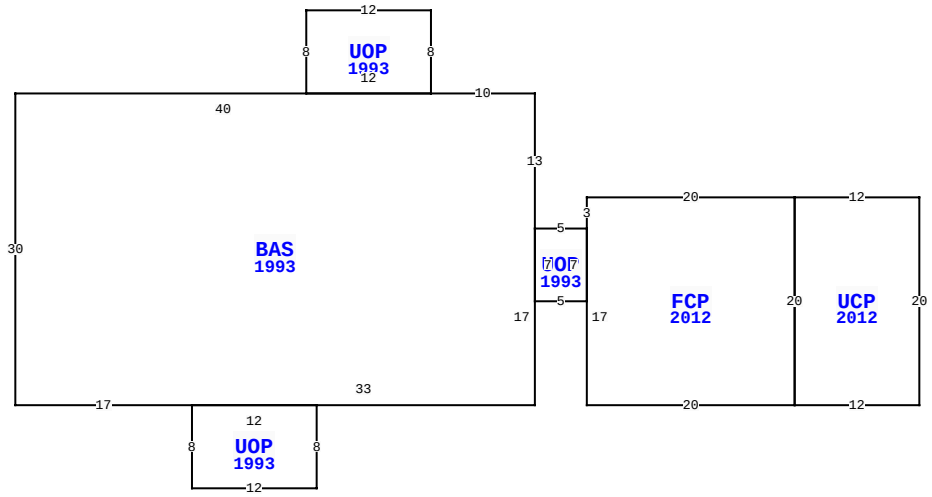

371718 HENRY SMITH RD, HILLIARD

BLD DATE		LGL DATE	
XF DATE		LAND DATE	06/13/2023 MLU
INC DATE		AG DATE	

NASSAU COUNTY PROPERTY

PAGE 1 of 1 4

VALUATION SUMMARY

VALUATION BY		STANDARD
Tax Group: 4	Tax Dist:	
BUILDING MARKET VALUE		121,528
TOTAL MARKET OB/XF VALUE		22,374
TOTAL LAND VALUE - MARKET		64,800
TOTAL MARKET VALUE		208,702
SOH/AGL Deduction		101,362
ASSESSED VALUE		107,340
TOTAL EXEMPTION VALUE	HX HB	50,000
BASE TAXABLE VALUE		57,340
TOTAL JUST VALUE		208,702
NCON VALUE		0
INCOME VALUE		
PREVIOUS YEAR MKT VALUE		171,302

PERMIT NUM	DESCRIPTION	AMT	ISSUED
18008483	CARPORT	13,670	08/20/2018
R1615095	REPAIR/RRF	4,000	06/30/2016

SALES DATA

OFF RECORD Number	DATE	TYPE INST	Q / U	V / I	RSN CD	SALE PRICE
0216/0462	1/01/1976	WD	Q	V		6,000

GRANTOR:

GRANTEE:

BUILDING NOTES

BUILDING DIMENSIONS

UCP=[YR=2012] W12 FCP=[YR=2012] W20 S3 UOP=[YR=1993] W5 BAS=[YR=1993] N13 W10 UOP=[YR=1993] N8 W12 S8 E12 $ W40 S30 E17 UOP=[YR=1993] S8 E12 N8 W12 $ E33 N17$ S7 E5 N7$ S17 E20 N20$ S20 E12 N20$.

EXTRA FEATURES

LN	OB/XF CODE	DESCRIPTION	BLD	CAP	L	W	UNITS	UT	Adj R	ADJ UNIT PRICE	ORIG COND	YEAR ON	YEAR ACTUAL	Q	% COND	OB/XF MKT VALUE	NOTES
1	0680	POLE SHED	0	100	0	0	320.00	SF	10.00	10.00	100	1980	1980	3	20	640	
2	0200	BARN WD 0-	0	100	0	0	300.00	SF	20.00	20.00	100	1980	1980	3	20	1,200	
3	0511	GARAGE CB-	0	100	24	24	576.00	SF	40.00	40.00	100	1983	1983	3	44	10,138	
4	0510	GARAGE WD-	0	100	34	34	1,156.00	SF	35.00	35.00	100	1983	1983	3	20	8,092	
5	0681	POLE SHED	0	100	32	24	768.00	SF	15.00	15.00	100	1990	1990	3	20	2,304	

LAND DESCRIPTION

TOTAL OB/XF 22,374

LN	USE CODE	CLS	LAND USE DESCRIPTION	CAP	RD	LOC ZONE	FRONT	DEPTH	TOT LND UTS	UNIT TYPE	DT	DPTH FACT	% COND	TOT ADJ	UNIT PRICE	ADJ UNIT PRICE	LAND VALUE	OTHER ADJUSTMENTS AND NOTES	YEAR	DENSITY	DECL	FRZ	YR	CONSRV
1	000115	C	SFR ACRES	100	0006	OR	0.00	0.00	2.16	AC		1.00	1.00	1.00	30,000.00	30,000.00	64,800							

REVIEW DATE 11/01/2018 BY TWX Total Acres: 2.16 Total Land Value: 64,800 Market: 0 Agricultural: 0 Common: 64,800 PRINTED 08/02/2023 BY SYS