PT OF SEC 20-2N-24E & PT OF
E1/4 OF SEC 29-2N-24E IN
OR 2087/1179 & PT OF E1/2 OF

ALLIGATOR CREEK FARM LLC
612125 RIVER RD
CALLAHAN, FL 32011

2023

20-2N-24-0000-0001-0000

NASSAU COUNTY PROPERTY

BUILDING CHARACTERISTICS

ELEMENT	CD	CONSTRUCTION
Exterior Wall	19	COMMON BRK 100
Roof Structur	03	GABLE/HIP 100
Roof Cover	12	MODULAR MT 100
Interior Wall	05	DRYWALL 100
Interior Floo	11	CLAY TILE 50
Interior Floo	12	HARDWOOD 50
Air Condition	03	CENTRAL 100
Heating Type	04	AIR DUCTED 100
Bedrooms		3 100
Bathrooms		2.5 100
Frame	02	WOOD FRAME 100
Stories	1.	1. 100
Units		0 100
BUD8 Adjustme	06	DIST 1D 100
Occupancy	00	NONE 100
Quality	05	Quality Level 05
DOR CODE	5000	IMPROVED AG
MAP NUM		MKT AREA 08
NEIGHBORHOOD/LOC	8001.00	

AREA TYPE	TOTAL GROSS AREA	PCT OF BASE	TOT ADJ AREA	SUBAREA MARKET VALUE
BAS	2,601	100	2,601	213,041
FGR	336	55	185	15,153
FOP	90	30	27	2,212
FOP	216	30	65	5,324
UCP	256	20	51	4,177
TOTALS	3,499		2,929	239,907

MARKET ADJUSTMENTS

TYPE	MDL	EFF. AREA	TOT ADJ PTS	EFF. BASE RATE	REPL. COST NEW	AYB	EYB	ECON	FNCT		NORM	% COND
0100	01	2,929	135.4540	122.25	358,070	1976	1976	0	0	0	33.00	67.00

2 SINGLE FAM – 0% - 0 Heated Area: 2601 HX Base Yr

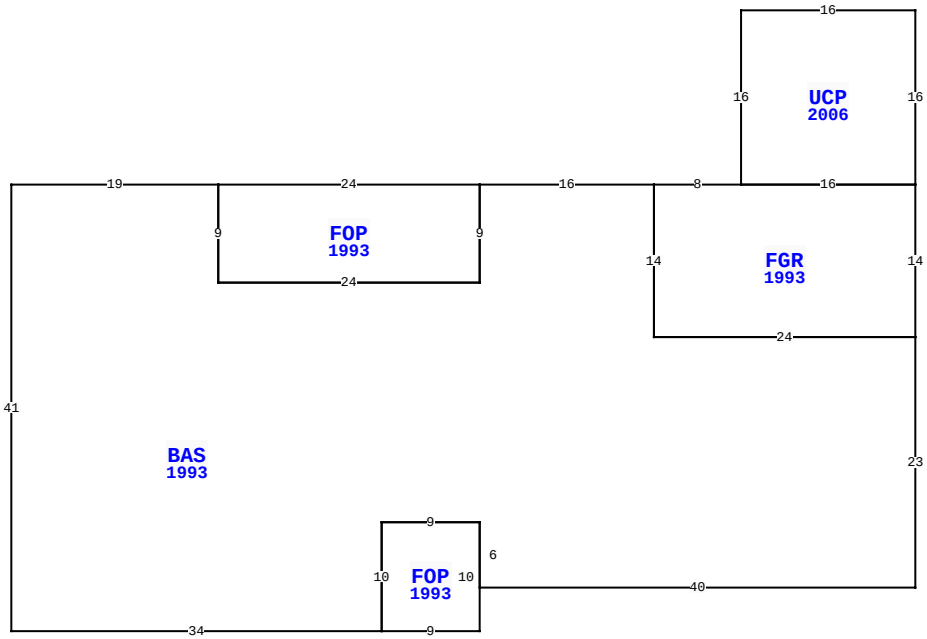

25417 WOOLIE B LN, CALLAHAN

BLD DATE		LGL DATE	
XF DATE		LAND DATE	06/13/2023 MLU
INC DATE		AG DATE	

NASSAU COUNTY PROPERTY — VALUATION SUMMARY

VALUATION BY	STANDARD
Tax Group: 6	Tax Dist:
BUILDING MARKET VALUE	239,907
TOTAL MARKET OB/XF VALUE	8,183
TOTAL LAND VALUE - MARKET	1,227,650
TOTAL MARKET VALUE	461,076
SOH/AGL Deduction	49,661
ASSESSED VALUE	411,415
TOTAL EXEMPTION VALUE	0
BASE TAXABLE VALUE	411,415
TOTAL JUST VALUE	1,475,740
NCON VALUE	0
INCOME VALUE	
PREVIOUS YEAR MKT VALUE	207,663

PERMIT NUM	DESCRIPTION	AMT	ISSUED

SALES DATA

OFF RECORD Number	DATE	TYPE INST	Q U /	V I /	RSN CD	SALE PRICE
2087/1182	11/30/2016	QC	U	I	11	100
GRANTOR: WRIGHT WILLIAM P JR E						
GRANTEE: ALLIGATOR CREEK FAR						
2087/1179	11/30/2016	QC	U	I	11	100
GRANTOR: WRIGHTS NASSAU COUNTY						
GRANTEE: ALLIGATOR CREEK FAR						

BUILDING NOTES

BUILDING DIMENSIONS

UCP=[YR=2006] W16 S16 FGR=[YR=1993] W8 BAS=[YR=1993] W16
FOP=[YR=1993] W24 S9 E24 N9$ S9 W24 N9 W19 S41 E34
FOP=[YR=1993] E9 N10 W9 S10$ N10 E9 S6 E40 N23 W24 N14$ S14
E24 N14 W16$ E16 N16$.

EXTRA FEATURES

LN	OB/XF CODE	DESCRIPTION	BLD	CAP	L	W	UNITS	UT	Adj R	ADJ UNIT PRICE	ORIG COND	YEAR ON	YEAR ACTUAL	Q	% COND	OB/XF MKT VALUE	NOTES
1	0504	FP-ELECTRI	0	0	0	0	1.00	UT	2,000.00	2,000.00	100	1976	1976	3	40	800	
2	0811	CONCRETE B	0	0	0	0	760.00	SF	5.20	5.20	100	1980	1980	3	35	1,383	
5	0937	WELL	0	0	0	0	1.00	UT	6,000.00	6,000.00	100	1950	1950	3	100	6,000	

LAND DESCRIPTION

TOTAL OB/XF 8,183

LN	USE CODE	CLS	LAND USE DESCRIPTION	CAP	RD	LOC ZONE	FRONT	DEPTH	TOT LND UTS	UNIT TYPE	DT	DPTH FACT	% COND	TOT ADJ	UNIT PRICE	ADJ UNIT PRICE	LAND VALUE	OTHER ADJUSTMENTS AND NOTES	YEAR	DENSITY	DECL	FRZ	YR	CONSRV
1	005000	C	RURAL HOME	0	0007	OR	0.00	0.00	1.00	AC		1.00	1.00	1.00	30,000.00	30,000.00	30,000							
2	005600	A	TIMBER 3 SI	0			0.00	0.00	8.00	AC		1.00	1.00	1.00	410.00	410.00	3,280							
3	006000	A	PAST1/HAY	0			0.00	0.00	367.06	AC		1.00	1.00	1.00	440.00	440.00	161,506							
4	005902	A	HARDWOOD SI	0			0.00	0.00	104.00	AC		1.00	1.00	1.00	175.00	175.00	18,200							
5	009910	M	MKT.VAL.AG	0			0.00	0.00	479.06	AC		1.00	1.00	1.00	2,500.00	2,500.00	1,197,650							

REVIEW DATE 04/21/2021 BY TWA Total Acres: 480.06 Total Land Value: 212,986 Market: 1,197,650 Agricultural: 182,986 Common: 30,000 PRINTED 08/02/2023 BY SYS