LOT 49
CRANE ISLAND PHASE 2A
OR 2270/910

GROVER WILLIAM H TRUST/GROVER WILLIAM H TRUSTEE
105 BROADBENT WAY
FERNANDINA BEACH, FL 32034

2023

19-2N-28-1000-0049-0000

BUILDING CHARACTERISTICS

ELEMENT	CD	CONSTRUCTION
Exterior Wall	10	ABOVE AVG 100
Roof Structur	08	IRREGULAR 100
Roof Cover	13	STAND SEAM 100
Interior Wall	05	DRYWALL 100
Interior Floo	12	HARDWOOD 70
Interior Floo	15	HARDTILE 30
Air Condition	03	CENTRAL 100
Heating Type	04	AIR DUCTED 100
Bedrooms		4 100
Bathrooms		5.5 100
Frame	02	WOOD FRAME 100
Stories	0	0 100
Units		0 100
Quality	03	Quality Level 03
DOR CODE	0100	SINGLE FAMILY
MAP NUM		MKT AREA 01
NEIGHBORHOOD/LOC	2036.0100	

AREA TYPE	TOTAL GROSS AREA	PCT OF BASE	TOT ADJ AREA	SUBAREA MARKET VALUE
BAL	135	15	20	5,686
BAL	230	15	34	9,666
BAL	276	15	41	11,656
BAS	1,524	100	1,524	433,273
FDG	648	60	389	110,593
FOP	70	30	21	5,970
FOP	204	30	61	17,342
FOP	276	30	83	23,597
FUS	513	100	513	145,846
FUS	1,173	100	1,173	333,484
TOTALS	5,211		3,875	1,101,662

MARKET ADJUSTMENTS

TYPE	MDL	EFF. AREA	TOT ADJ PTS	EFF. BASE RATE	REPL. COST NEW	AYB	EYB	ECON	FNCT		NORM	% COND
0500	12	3,875	199.5120	284.30	1,101,662	2022	2022	0	0	0	0.00	100.00

1 SFR CUST – 100% - 2023 Heated Area: 3210 HX Base Yr 2023

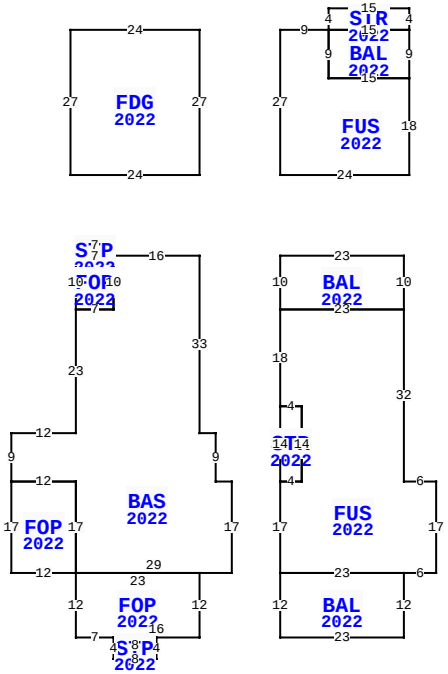

** This building has 14 Sub-Areas

105 BROADBENT WAY, FERNANDINA BEACH

BLD DATE		LGL DATE	
XF DATE		LAND DATE	
INC DATE		AG DATE	

NASSAU COUNTY PROPERTY

PAGE 1 of 1 2

VALUATION SUMMARY

VALUATION BY		STANDARD
Tax Group: 2	Tax Dist:	
BUILDING MARKET VALUE		1,101,662
TOTAL MARKET OB/XF VALUE		29,744
TOTAL LAND VALUE - MARKET		350,000
TOTAL MARKET VALUE		1,481,406
SOH/AGL Deduction		0
ASSESSED VALUE		1,481,406
TOTAL EXEMPTION VALUE	HX HB	50,000
BASE TAXABLE VALUE		1,431,406
TOTAL JUST VALUE		1,481,406
NCON VALUE		1,131,398
INCOME VALUE		
PREVIOUS YEAR MKT VALUE		300,000

PERMIT NUM	DESCRIPTION	AMT	ISSUED
20211039	CO ISSUED	0	12/08/2023
20211039	NEW CONSTR	0	04/22/2021

SALES DATA

OFF RECORD Number	DATE	TYPE INST	Q / U	V / I	RSN CD	SALE PRICE
2404/0585	10/28/2020	WD	Q	V	02	370,000

GRANTOR: THE RANGE AT CRANE IS

GRANTEE: GROVER WILLIAM H TR

BUILDING NOTES

BUILDING DIMENSIONS

BAS=[YR=2022] W16 STP=[YR=2022] N2 W7 S2 FOP=[YR=2022] S10 E7 N10 W7$ E7$ S10 W7 S23 W12 S9 FOP=[YR=2022] S17 E12 N17 W12$ E12 S17 FOP=[YR=2022] S12 E7 STP=[YR=2022] S4 E8 N4 W8$ E16 N12 W23$ E29 N17 W3 N9 W3 N33$ PTR=N15 FDG=[YR=2022] N27 W24 S27 E24$ E15 FUS=[YR=2022] E24 N18 BAL=[YR=2022] N9 STR=[YR=2022] N4 W15 S4 E15$ W15 S9 E15$ W15 N9 W9 S27 $ S15 BAL=[YR=2022] E23 S10 FUS=[YR=2022] S32 E6 S17 W6 BAL=[YR=2022] S12 W23 N12 E23$ W23 N17 STR=[YR=2022] N14 E4 S14 W4$ E4 N14 W4 N18 E23$ W23 N10$ N15 W15 S15$.

EXTRA FEATURES

LN	OB/XF CODE	DESCRIPTION	BLD	CAP	L	W	UNITS	UT	Adj R	ADJ UNIT PRICE	ORIG COND	YEAR ON	YEAR ACTUAL	Q	% COND	OB/XF MKT VALUE	NOTES
1	0409	ELEVATOR R	0	100	0	0	1.00	UT	10,200.00	10,200.00	100	2022	2022	3	100	10,200	
2	0504	FP-ELECTRI	0	100	0	0	2.00	UT	2,000.00	2,000.00	100	2022	2022	3	100	4,000	
3	0855	CONC PAVER	0	100	0	0	1,237.00	SF	10.00	10.00	100	2022	2022	3	100	12,370	
4	1241	WD DECK G	0	100	0	0	276.00	UT	11.50	11.50	100	2022	2022	3	100	3,174	

LAND DESCRIPTION

TOTAL OB/XF 29,744

LN	USE CODE	CLS	LAND USE DESCRIPTION	CAP	RD	LOC ZONE	FRONT	DEPTH	TOT LND UTS	UNIT TYPE	DT	DPTH FACT	% COND	TOT ADJ	UNIT PRICE	ADJ UNIT PRICE	LAND VALUE	OTHER ADJUSTMENTS AND NOTES	YEAR	DENSITY	DECL	FRZ	YR	CONSRV
1	000100	C	SFR	100		R-1	0.00	0.00	1.00	LT		1.00	1.00	1.00	350,000.00	350,000.00	350,000							

REVIEW DATE 01/30/2023 BY TW Total Acres: 0.00 Total Land Value: 350,000 Market: 0 Agricultural: 0 Common: 350,000 PRINTED 08/02/2023 BY SYS