LOT 45
CRANE ISLAND PHASE 1 PB 8/308

ARRANTS W WAYNE & BERKELY
80 BROADBENT WAY
FERNANDINA BEACH, FL 32034

2023

19-2N-28-1000-0045-0000

NASSAU COUNTY PROPERTY

BUILDING CHARACTERISTICS

ELEMENT	CD	CONSTRUCTION
Exterior Wall	10	ABOVE AVG 100
Roof Structur	08	IRREGULAR 100
Roof Cover	13	STAND SEAM 100
Interior Wall	05	DRYWALL 100
Interior Floo	12	HARDWOOD 70
Interior Floo	15	HARDTILE 30
Air Condition	03	CENTRAL 100
Heating Type	04	AIR DUCTED 100
Bedrooms		4 100
Bathrooms		4.5 100
Frame	02	WOOD FRAME 100
Stories	0	0 100
Units		0 100
Quality	03	Quality Level 03
DOR CODE	0100	SINGLE FAMILY
MAP NUM		MKT AREA 01
NEIGHBORHOOD/LOC	2036.0100	

AREA TYPE	TOTAL GROSS AREA	PCT OF BASE	TOT ADJ AREA	SUBAREA MARKET VALUE
BAL	210	15	32	8,691
BAS	2,246	100	2,246	609,991
FGR	733	55	403	109,451
FOP	155	30	46	12,493
FOP	430	30	129	35,035
FOP	516	30	155	42,096
FUS	429	100	429	116,512
FUS	974	100	974	264,529
STP	21	10	2	543
STP	60	10	6	1,630
TOTALS	5,934		4,438	1,205,316

MARKET ADJUSTMENTS

TYPE	MDL	EFF. AREA	TOT ADJ PTS	EFF. BASE RATE	REPL. COST NEW	AYB	EYB	ECON	FNCT		NORM	% COND
0500	12	4,438	190.5904	271.59	1,205,316	2022	2022	0	0	0	0.00	100.00

1 SFR CUST – 100% - 2023 Heated Area: 3649 HX Base Yr 2023

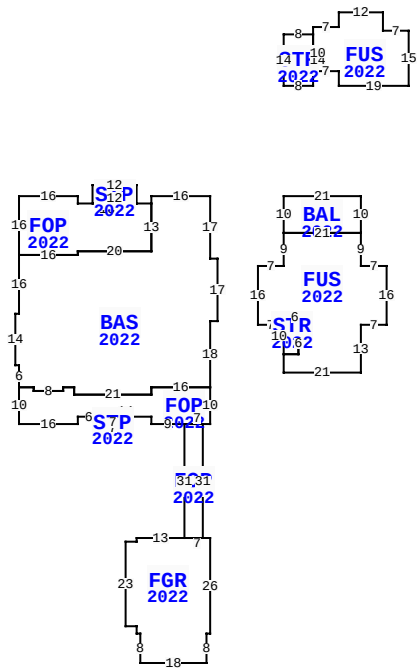

** This building has 12 Sub-Areas

80 BROADBENT WAY, FERNANDINA BEACH

BLD DATE		LGL DATE	
XF DATE		LAND DATE	
INC DATE		AG DATE	

VALUATION SUMMARY

VALUATION BY		STANDARD
Tax Group: 2	Tax Dist:	
BUILDING MARKET VALUE		1,205,316
TOTAL MARKET OB/XF VALUE		34,170
TOTAL LAND VALUE - MARKET		500,000
TOTAL MARKET VALUE		1,739,486
SOH/AGL Deduction		0
ASSESSED VALUE		1,739,486
TOTAL EXEMPTION VALUE	HX HB	50,000
BASE TAXABLE VALUE		1,689,486
TOTAL JUST VALUE		1,739,486
NCON VALUE		1,239,465
INCOME VALUE		
PREVIOUS YEAR MKT VALUE		500,000

PERMIT NUM	DESCRIPTION	AMT	ISSUED
20211284	CO ISSUED	0	10/26/2022
20211284	NEW CONSTR	0	05/19/2021

SALES DATA

OFF RECORD Number	DATE	TYPE INST	Q / U	V / I	RSN CD	SALE PRICE
2418/1280	12/17/2020	WD	Q	V	02	525,000

GRANTOR: THE RANGE AT CRANE IS

GRANTEE: ARRANTS W WAYNE & B

EXTRA FEATURES

LN	OB/XF CODE	DESCRIPTION	BLD	CAP	L	W	UNITS	UT	Adj R	ADJ UNIT PRICE	ORIG COND	YEAR ON	YEAR ACTUAL	Q	% COND	OB/XF MKT VALUE	NOTES
1	0504	FP-ELECTRI	0	100	0	0	2.00	UT	2,000.00	2,000.00	100	2022	2022	3	100	4,000	
2	0855	CONC PAVER	0	100	0	0	2,267.00	SF	10.00	10.00	100	2022	2022	3	100	22,670	
3	0462	ST/AL FNC	0	100	180	4	720.00	SF	10.00	10.00	100	2022	2022	3	100	7,200	
4	0463	FENCE GATE	0	100	0	0	1.00	UT	300.00	300.00	100	2022	2022	3	100	300	

BUILDING NOTES

BUILDING DIMENSIONS

BAS=[YR=2022] W16 S2 FOP=[YR=2022] W4 STP=[YR=2022] N5 W12 S5 E12$ W16 N2 W16 S16 E16 N1 E20 N13$ S13 W20 S1 W16 S16 W1 S14 E1 S6 FOP=[YR=2022] S10 E16 N2 E6 STP=[YR=2022] S3 E7 N3 W7$ E14 S2 E9 FOP=[YR=2022] S31 FGR=[YR=2022] W13 S1 W3 S23 E3 S2 E1 S8 E18 N8 E1 N26 W7$ E5 N31 W5$ E7 N10 W16 S2 W21 N2 W3 S1 W8 N1 W4$ E4 S1 E8 N1 E3 S2 E21 N2 E16 N18 E2 N17 W2 N17$ PTR=E20 BAL=[YR=2022] E21 S10 FUS=[YR=2022] S9 E7 S16 W7 S13 W21 N5 STR=[YR=2022] N10 E6 S4 W2 S6 W4$ E4 N6 E2 N4 W6 S2 W7 N16 E7 N9 E21$ W21 N10$ N30 STR=[YR=2022] N14 E8 FUS=[YR=2022] N2 E7 N4 E12 S5 E7 S15 W19 N4 W7 N10 $ S14 W8$ S30 W20$.

LAND DESCRIPTION

TOTAL OB/XF 34,170

LN	USE CODE	CLS	LAND USE DESCRIPTION	CAP	RD	LOC ZONE	FRONT	DEPTH	TOT LND UTS	UNIT TYPE	DT	DPTH FACT	% COND	TOT ADJ	UNIT PRICE	ADJ UNIT PRICE	LAND VALUE	OTHER ADJUSTMENTS AND NOTES	YEAR	DENSITY	DECL	FRZ	YR	CONSRV
1	000116	C	SFR MARSH	100		R-1	0.00	0.00	1.00	LT		1.00	1.00	1.00	500,000.00	500,000.00	500,000							

REVIEW DATE 01/30/2023 BY TW Total Acres: 0.00 Total Land Value: 500,000 Market: 0 Agricultural: 0 Common: 500,000 PRINTED 08/02/2023 BY SYS