LOT 21
CRANE ISLAND PHASE 1 PB 8/308

BOBEAR DANIEL F IRREVOCABLE TRUST/BOBEAR KRISTEN T
126 NELSON AVE
SARATOGA SPRINGS, NY 12866

2023

19-2N-28-1000-0021-0000

NASSAU COUNTY PROPERTY

BUILDING CHARACTERISTICS

ELEMENT	CD	CONSTRUCTION
Exterior Wall	10	ABOVE AVG 100
Roof Structur	03	GABLE/HIP 100
Roof Cover	10	WD SHINGLE 100
Interior Wall	05	DRYWALL 90
Interior Wall	08	DECORATIVE 10
Interior Floo	12	HARDWOOD 70
Interior Floo	11	CLAY TILE 30
Air Condition	03	CENTRAL 100
Heating Type	04	AIR DUCTED 100
Bedrooms		4 100
Bathrooms		3 100
Frame	02	WOOD FRAME 100
Stories	1.5	1.5 100
Units		0 100
Quality	06	Quality Level 06
DOR CODE	0100	SINGLE FAMILY
MAP NUM		MKT AREA 01
NEIGHBORHOOD/LOC	2036.0100	

AREA TYPE	TOTAL GROSS AREA	PCT OF BASE	TOT ADJ AREA	SUBAREA MARKET VALUE
BAS	2,259	100	2,259	675,458
DCK	224	10	22	6,578
FDG	576	60	346	103,456
FOP	72	30	22	6,578
FOP	120	30	36	10,764
FOP	400	30	120	35,881
FSP	324	40	130	38,871
FUS	1,011	100	1,011	302,297
SFB	240	80	192	57,410
STP	25	10	2	598
TOTALS	5,363		4,151	1,241,180

MARKET ADJUSTMENTS

TYPE	MDL	EFF. AREA	TOT ADJ PTS	EFF. BASE RATE	REPL. COST NEW	AYB	EYB	ECON	FNCT		NORM	% COND
0500	12	4,151	210.8876	300.51	1,247,417	2020	2020	0	0	0	0.50	99.50

1 SFR CUST – 100% - 2022 Heated Area: 3462 HX Base Yr 2022

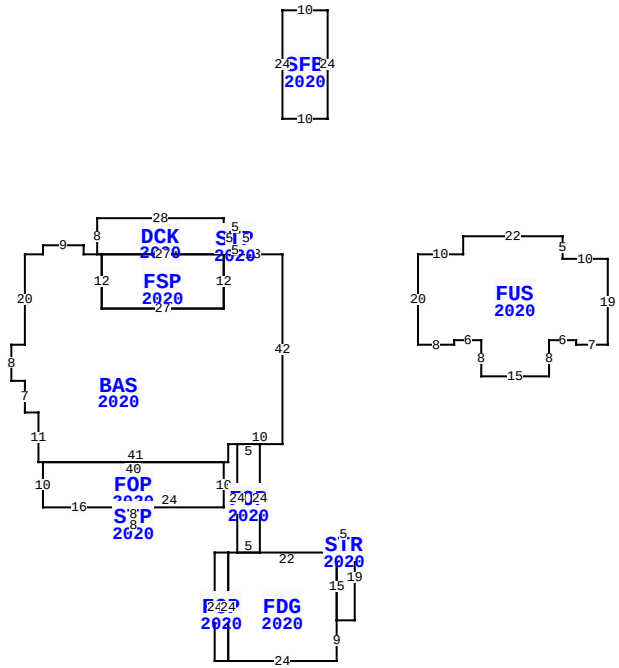

** This building has 12 Sub-Areas

32 SALT HAMMOCK CT, FERNANDINA BEACH

BLD DATE		LGL DATE	
XF DATE		LAND DATE	
INC DATE		AG DATE	

VALUATION SUMMARY

VALUATION BY		STANDARD
Tax Group: 2	Tax Dist:	
BUILDING MARKET VALUE		1,241,180
TOTAL MARKET OB/XF VALUE		31,116
TOTAL LAND VALUE - MARKET		425,000
TOTAL MARKET VALUE		1,697,296
SOH/AGL Deduction		330,613
ASSESSED VALUE		1,366,683
TOTAL EXEMPTION VALUE	HX HB	50,000
BASE TAXABLE VALUE		1,316,683
TOTAL JUST VALUE		1,697,296
NCON VALUE		0
INCOME VALUE		
PREVIOUS YEAR MKT VALUE		1,326,877

PERMIT NUM	DESCRIPTION	AMT	ISSUED
20190177	CO ISSUED	0	02/04/2020
20190177	NEW CONSTR	0	02/26/2019
20190178	GARAGE	0	02/26/2019

SALES DATA

OFF RECORD Number	DATE	TYPE INST	Q / U	V / I	RSN CD	SALE PRICE
2641/1851	5/12/2023	WD	Q	I	01	3,100,000
GRANTOR: REA WILLIAM J & CONNI						
GRANTEE: BOBEAR DANIEL F IRR						
2326/1899	12/13/2019	WD	Q	I	01	500,000
GRANTOR: PICKETT CONSTRUCTION						
GRANTEE: REA WILLIAM J & CON						

BUILDING NOTES

BUILDING DIMENSIONS

BAS=[YR=2020] W13 DCK=[YR=2020] N1 STP=[YR=2020] E5 N5 W5 S5 $ N7 W28 S8E1 FSP=[YR=2020] S12 E27 N12 W27 $ E27 $ S12 W27 N12 W4 N2 W9 S2 W4 S20 W3 S8 E3 S7 E3 S11 E1 FOP=[YR=2020] S10 E16 STP=[YR=2020] S4 E8 N4 W8 $ E24 N10 W40 $ E41 N4 E2 FOP=[YR=2020] S24FDG=[YR=2020] W2 FOP=[YR=2020] W3 S24 E3 N24 $ S24 E24 N9 STR=[YR=2020] E4 N19 W5 S4 E1 S15 $ N15 W22 $ E5 N24 W5$ E10 N42 $ PTR= E30 FUS=[YR=2020] E10 N4 E22 S5 E10 S19 W7 N1 W6 S8 W15 N8 W6 S1 W8 N20 $ W30 $ PTR= N30 SFB=[YR=2020] N24 E10 S24 W10 $ S30 $.

EXTRA FEATURES

LN	OB/XF CODE	DESCRIPTION	BLD	CAP	L	W	UNITS	UT	Adj R	ADJ UNIT PRICE	ORIG COND	YEAR ON	YEAR ACTUAL	Q	% COND	OB/XF MKT VALUE	NOTES
1	0855	CONC PAVER	0	100	0	0	2,793.00	SF	10.00	10.00	100	2020	2020	3	99	27,651	
2	0500	FP-PRE FAB	0	100	0	0	1.00	UT	3,500.00	3,500.00	100	2020	2020	3	99	3,465	

LAND DESCRIPTION

TOTAL OB/XF 31,116

LN	USE CODE	CLS	LAND USE DESCRIPTION	CAP	RD	LOC ZONE	FRONT	DEPTH	TOT LND UTS	UNIT TYPE	DT	DPTH FACT	% COND	TOT ADJ	UNIT PRICE	ADJ UNIT PRICE	LAND VALUE	OTHER ADJUSTMENTS AND NOTES	YEAR	DENSITY	DECL	FRZ	YR	CONSRV
1	000100	C	SFR	100		R-1	0.00	0.00	1.00	LT		1.00	1.00	1.00	425,000.00	425,000.00	425,000							

REVIEW DATE 11/23/2020 BY RK Total Acres: 0.00 Total Land Value: 425,000 Market: 0 Agricultural: 0 Common: 425,000 PRINTED 08/02/2023 BY SYS