LOT 5
CRANE ISLAND PHASE 1 PB 8/308

CABIN TRUST/WRIGHT STEVEN C TRUSTEE
96007 OCEAN BREEZE WAY
FERNANDINA BEACH, FL 32034

2023

19-2N-28-1000-0005-0000

NASSAU COUNTY PROPERTY

BUILDING CHARACTERISTICS

ELEMENT	CD	CONSTRUCTION
Exterior Wall	10	ABOVE AVG 100
Roof Structur	08	IRREGULAR 100
Roof Cover	13	STAND SEAM 100
Interior Wall	05	DRYWALL 100
Interior Floo	12	HARDWOOD 90
Interior Floo	11	CLAY TILE 10
Air Condition	03	CENTRAL 100
Heating Type	04	AIR DUCTED 100
Bedrooms		3 100
Bathrooms		3.5 100
Frame	02	WOOD FRAME 100
Stories	0	0 100
Units		0 100
Quality	06	Quality Level 06

DOR CODE	0100	SINGLE FAMILY	
MAP NUM		MKT AREA	01
NEIGHBORHOOD/LOC	2036.0100		

AREA TYPE	TOTAL GROSS AREA	PCT OF BASE	TOT ADJ AREA	SUBAREA MARKET VALUE
BAS	1,575	100	1,575	564,480
DCK	72	10	7	2,509
FOP	102	30	31	11,110
FSP	55	40	22	7,885
FSP	601	40	240	86,016
FUS	841	100	841	301,414
STP	18	10	2	717
STP	24	10	2	717
STP	24	10	2	717
STR	64	10	6	2,150
TOTALS	3,376		2,728	977,715

MARKET ADJUSTMENTS

TYPE	MDL	EFF. AREA	TOT ADJ PTS	EFF. BASE RATE	REPL. COST NEW	AYB	EYB	ECON	FNCT		NORM	% COND
0500	12	2,728	251.5104	358.40	977,715	2022	2022	0	0	0	0.00	100.00

1 SFR CUST – 0% - 0 Heated Area: 2416 HX Base Yr

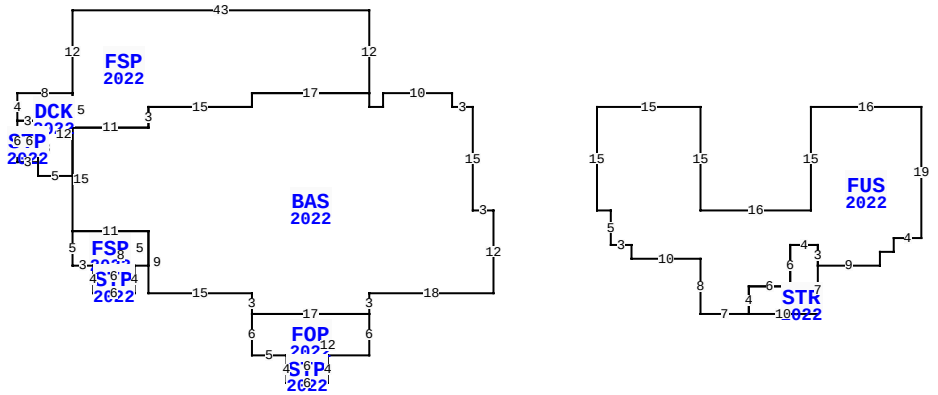

15 SWEETGRASS CT, FERNANDINA BEACH

BLD DATE		LGL DATE	
XF DATE		LAND DATE	05/30/2023 DC
INC DATE		AG DATE	

VALUATION SUMMARY

VALUATION BY	STANDARD
Tax Group: 2	Tax Dist:
BUILDING MARKET VALUE	1,073,354
TOTAL MARKET OB/XF VALUE	21,123
TOTAL LAND VALUE - MARKET	300,000
TOTAL MARKET VALUE	1,394,477
SOH/AGL Deduction	0
ASSESSED VALUE	1,394,477
TOTAL EXEMPTION VALUE	0
BASE TAXABLE VALUE	1,394,477
TOTAL JUST VALUE	1,394,477
NCON VALUE	1,094,467
INCOME VALUE	
PREVIOUS YEAR MKT VALUE	300,000

PERMIT NUM	DESCRIPTION	AMT	ISSUED
20211332	GARAGE	0	05/20/2021
20211280	NEW CONSTR	0	05/20/2021

SALES DATA

OFF RECORD Number	DATE	TYPE INST	Q U	V I	RSN CD	SALE PRICE
2439/1930	3/02/2021	WD	U	I	11	100
GRANTOR: THE RANGE AT CRANE IS						
GRANTEE: CABIN TRUST						
2433/1610	2/12/2021	WD	Q	V	01	350,000
GRANTOR: THE RANGE AT CRANE IS						
GRANTEE: CABIN TRUST						

BUILDING NOTES

BUILDING DIMENSIONS

BAS=[YR=2022] W3 N15 W3 N2 W10 S2 W2 N2 FSP=[YR=2022] N12 W43 S12 DCK=[YR=2022] W8 S4 STP=[YR=2022] S6 E3 N6 W3$ E3 S8 E5 N12$ S5 E11 N3 E15 N2 E17$ W17 S2 W15 S3 W11 S15 FSP=[YR=2022] S5 E3 STP=[YR=2022] S4 E6 N4 W6$ E8 N5 W11$ E11 S9 E15 S3 FOP=[YR=2022] S6 E5 STP=[YR=2022] S4 E6 N4 W6$ E12 N6 W17$ E17 N3 E18 N12$ PTR=E15 N15 FUS=[YR=2022] E15 S15 E16 N15 E16 S19 W4 S2 W2 S2 W9STR=[YR=2022] S7 W10 N4 E6 N6 E4 S3$ N3 W4 S6 W6 S4 W7 N8 W10 N2 W3 N5 W2N15 $ W15 S15$.

EXTRA FEATURES

LN	OB/XF CODE	DESCRIPTION	BLD	CAP	L	W	UNITS	UT	Adj R	ADJ UNIT PRICE	ORIG COND	YEAR ON	YEAR ACTUAL	Q	% COND	OB/XF MKT VALUE	NOTES
1	1243	WD DECK F	0	0	0	0	800.00	SF	8.00	8.00	100	2022	2022	3	100	6,400	
2	0810	CONCRETE A	0	0	0	0	265.00	SF	6.50	6.50	100	2022	2022	3	100	1,723	
3	0600	SUMMER KIT	0	0	0	0	1.00	UT	5,000.00	5,000.00	100	2022	2022	3	100	5,000	
4	0504	FP-ELECTRI	0	0	0	0	1.00	UT	6,000.00	6,000.00	100	2022	2022	3	100	6,000	
5	0504	FP-ELECTRI	0	0	0	0	1.00	UT	2,000.00	2,000.00	100	2022	2022	3	100	2,000	

LAND DESCRIPTION

TOTAL OB/XF 21,123

LN	USE CODE	CLS	LAND USE DESCRIPTION	CAP	RD	LOC ZONE	FRONT	DEPTH	TOT LND UTS	UNIT TYPE	DT	DPTH FACT	% COND	TOT ADJ	UNIT PRICE	ADJ UNIT PRICE	LAND VALUE	OTHER ADJUSTMENTS AND NOTES	YEAR	DENSITY	DECL	FRZ	YR	CONSRV
1	000000	C	VAC RES	0		R-1	0.00	0.00	1.00	LT		1.00	1.00	1.00	300,000.00	300,000.00	300,000							

REVIEW DATE 01/04/2023 BY TW Total Acres: 0.00 Total Land Value: 300,000 Market: 0 Agricultural: 0 Common: 300,000 PRINTED 08/02/2023 BY SYS

LOT 5
CRANE ISLAND PHASE 1 PB 8/308

CABIN TRUST/WRIGHT STEVEN C TRUSTEE
96007 OCEAN BREEZE WAY
FERNANDINA BEACH, FL 32034

2023

19-2N-28-1000-0005-0000

NASSAU COUNTY PROPERTY

BUILDING CHARACTERISTICS

ELEMENT	CD	CONSTRUCTION
Exterior Wall	10	ABOVE AVG 100
Roof Structur	03	GABLE/HIP 100
Roof Cover	13	STAND SEAM 100
Interior Wall	05	DRYWALL 100
Interior Floo	03	CONC FINSH 60
Interior Floo	12	HARDWOOD 40
Air Condition	03	CENTRAL 100
Heating Type	04	AIR DUCTED 100
Bedrooms		1 100
Bathrooms		1 100
Frame	02	WOOD FRAME 100
Stories	0	0 100
Units		0 100
Quality	03	Quality Level 03
DOR CODE	0100	SINGLE FAMILY
MAP NUM		MKT AREA 01
NEIGHBORHOOD/LOC	2036.0100	

AREA TYPE	TOTAL GROSS AREA	PCT OF BASE	TOT ADJ AREA	SUBAREA MARKET VALUE
BAL	64	15	10	689
BAS	829	100	829	57,080
FUS	546	100	546	37,594
STR	40	10	4	275
TOTALS	1,479		1,389	95,639

MARKET ADJUSTMENTS

TYPE	MDL	EFF. AREA	TOT ADJ PTS	EFF. BASE RATE	REPL. COST NEW	AYB	EYB	ECON	FNCT		NORM	% COND
6500	12	1,389	198.7232	69.55	96,605	2022	2022	0	0	0	1.00	99.00

2 GARAGE RES – 0% - 0 Heated Area: 1375 HX Base Yr

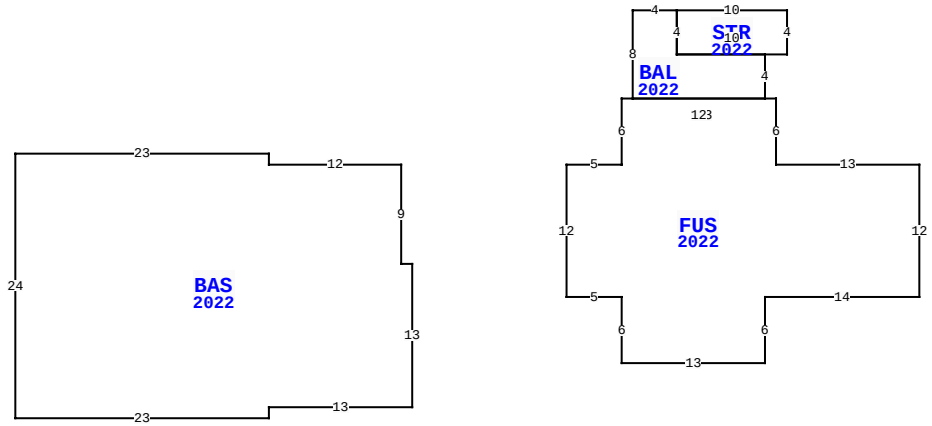

15 SWEETGRASS CT, FERNANDINA BEACH

BLD DATE		LGL DATE	
XF DATE		LAND DATE	05/30/2023 DC
INC DATE		AG DATE	

NASSAU COUNTY PROPERTY — VALUATION SUMMARY

VALUATION BY	STANDARD
Tax Group: 2	Tax Dist:
BUILDING MARKET VALUE	1,073,354
TOTAL MARKET OB/XF VALUE	21,123
TOTAL LAND VALUE - MARKET	300,000
TOTAL MARKET VALUE	1,394,477
SOH/AGL Deduction	0
ASSESSED VALUE	1,394,477
TOTAL EXEMPTION VALUE	0
BASE TAXABLE VALUE	1,394,477
TOTAL JUST VALUE	1,394,477
NCON VALUE	1,094,467
INCOME VALUE	
PREVIOUS YEAR MKT VALUE	300,000

PERMIT NUM	DESCRIPTION	AMT	ISSUED

SALES DATA

OFF RECORD Number	DATE	TYPE INST	Q U /	V I /	RSN CD	SALE PRICE
2439/1930	3/02/2021	WD	U	I	11	100
GRANTOR: THE RANGE AT CRANE IS						
GRANTEE: CABIN TRUST						
2433/1610	2/12/2021	WD	Q	V	01	350,000
GRANTOR: THE RANGE AT CRANE IS						
GRANTEE: CABIN TRUST						

BUILDING NOTES

BUILDING DIMENSIONS

BAS=[YR=2022] W12 N1 W23 S24 E23 N1 E13 N13 W1 N9$ PTR=E15
FUS=[YR=2022] E5 N6 E1 BAL=[YR=2022] N8 E4 STR=[YR=2022] E10 S4 W10 N4$ S4 E8 S4 W12$ E13 S6 E13 S12 W14 S6 W13 N6 W5 N12$ W15$.

EXTRA FEATURES

L N	OB/XF CODE	DESCRIPTION	BLD	CAP	L	W	UNITS	UT	Adj R	ADJ UNIT PRICE	ORIG COND	YEAR ON	YEAR ACTUAL	Q	% COND	OB/XF MKT VALUE	NOTES

LAND DESCRIPTION

TOTAL OB/XF 0

L N	USE CODE	CLS	LAND USE DESCRIPTION	CAP	R D	LOC ZONE	FRONT	DEPTH	TOT LND UTS	UNIT TYPE	D T	DPTH FACT	% COND	TOT ADJ	UNIT PRICE	ADJ UNIT PRICE	LAND VALUE	OTHER ADJUSTMENTS AND NOTES	YEAR	DENSITY	DECL	FRZ	YR	CONSRV

REVIEW DATE 01/04/2023 BY TW Total Acres: 0.00 Total Land Value: 300,000 Market: 0 Agricultural: 0 Common: 300,000 PRINTED 08/02/2023 BY SYS