PT GOVT LOT 2 OF SEC 19-2N-25E
IN OR 2345/320

ARLINE DOYLE CARLTON JR
8709 YUCCA TRAIL
RALEIGH, FL 27615

2023

19-2N-25-0000-0083-0000

NASSAU COUNTY PROPERTY

BUILDING CHARACTERISTICS

ELEMENT	CD	CONSTRUCTION
Exterior Wall	06	BD/BATTEN 80
Exterior Wall	04	SINGLE SID 20
Roof Structur	03	GABLE/HIP 100
Roof Cover	01	MINIMUM 100
Interior Wall	04	PLYWOOD 100
Interior Floo	14	CARPET 80
Interior Floo	08	SHT VINYL 20
Air Condition	01	NONE 100
Heating Type	02	CONVECTION 100
Bedrooms		3 100
Bathrooms		1 100
Frame	02	WOOD FRAME 100
Stories	1.	1. 100
Units		0 100
BUD8 Adjustme	06	DIST 1D 100
Occupancy	00	NONE 100
Quality	03	Quality Level 03
DOR CODE	0100	SINGLE FAMILY
MAP NUM		MKT AREA 08
NEIGHBORHOOD/LOC	8001.00	

AREA TYPE	TOTAL GROSS AREA	PCT OF BASE	TOT ADJ AREA	SUBAREA MARKET VALUE
BAS	1,778	100	1,778	64,471
FSP	72	40	29	1,052
SFB	420	80	336	12,184
TOTALS	2,270		2,143	77,705

MARKET ADJUSTMENTS

TYPE	MDL	EFF. AREA	TOT ADJ PTS	EFF. BASE RATE	REPL. COST NEW	AYB	EYB	ECON	FNCT		NORM	% COND
0100	01	2,143	80.3600	72.52	155,410	1930	1930	0	0	0	50.00	50.00

1 SINGLE FAM – 0% - 0 Heated Area: 2114 HX Base Yr

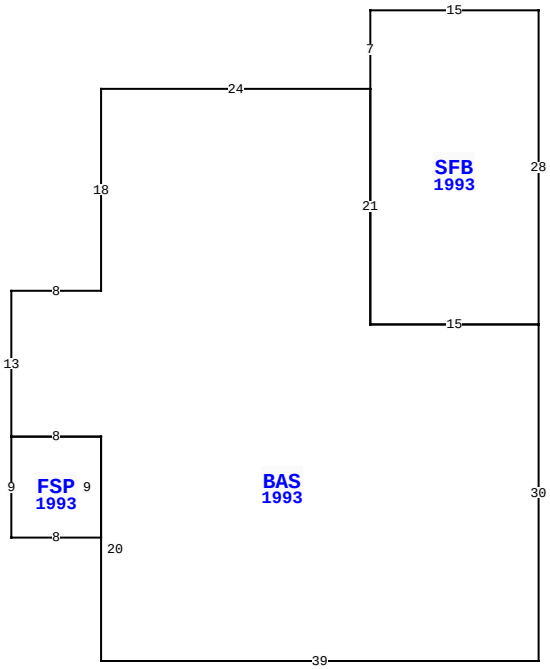

45053 HISTORICAL LN, CALLAHAN

BLD DATE		LGL DATE	
XF DATE		LAND DATE	
INC DATE		AG DATE	

VALUATION SUMMARY

VALUATION BY	STANDARD
Tax Group: 6	Tax Dist:
BUILDING MARKET VALUE	77,705
TOTAL MARKET OB/XF VALUE	2,747
TOTAL LAND VALUE - MARKET	23,450
TOTAL MARKET VALUE	103,902
SOH/AGL Deduction	13,601
ASSESSED VALUE	90,301
TOTAL EXEMPTION VALUE	0
BASE TAXABLE VALUE	90,301
TOTAL JUST VALUE	103,902
NCON VALUE	0
INCOME VALUE	
PREVIOUS YEAR MKT VALUE	90,796

PERMIT NUM	DESCRIPTION	AMT	ISSUED
6540	REMODEL	21,945	06/18/1990

SALES DATA

OFF RECORD Number	DATE	TYPE INST	Q U /	V I /	RSN CD	SALE PRICE
2345/0320	3/05/2020	QC	U	I	11	100
GRANTOR: ARLINE SAFFRONIA G						
GRANTEE: ARLINE DOYLE CARLTO						
0060/0435	7/24/1965	WD	U	V		0
GRANTOR: DAUGHTRY D W & ELLA M						
GRANTEE: ARLINE DOYLE & SAFF						

BUILDING NOTES

BUILDING DIMENSIONS

SFB=[YR=1993] W15 S7 BAS=[YR=1993] W24 S18 W8 S13
FSP=[YR=1993] S9 E8 N9 W8$ E8 S20 E39 N30 W15 N21$ S21 E15
N28$.

EXTRA FEATURES

LN	OB/XF CODE	DESCRIPTION	BLD	CAP	L	W	UNITS	UT	Adj R	ADJ UNIT PRICE	ORIG COND	YEAR ON	YEAR ACTUAL	Q	% COND	OB/XF MKT VALUE	NOTES
1	0570	JUNK HOUSE	0	0	0	0	1.00	UT	500.00	500.00	100	1910	1910	3	100	500	
2	0680	POLE SHED	0	0	34	22	748.00	SF	10.00	10.00	100	1970	1970	3	20	1,496	
3	0810	CONCRETE A	0	0	0	0	172.00	SF	6.50	6.50	100	1980	1980	3	35	391	
4	0680	POLE SHED	0	0	15	12	180.00	SF	10.00	10.00	100	1970	1970	3	20	360	

LAND DESCRIPTION

TOTAL OB/XF 2,747

LN	USE CODE	CLS	LAND USE DESCRIPTION	CAP	RD	LOC ZONE	FRONT	DEPTH	TOT LND UTS	UNIT TYPE	DT	DPTH FACT	% COND	TOT ADJ	UNIT PRICE	ADJ UNIT PRICE	LAND VALUE	OTHER ADJUSTMENTS AND NOTES	YEAR	DENSITY	DECL	FRZ	YR	CONSRV
1	000100	C	SFR	0	0006	RM	0.00	0.00	0.67	AC		1.00	1.00	1.00	35,000.00	35,000.00	23,450							

REVIEW DATE 07/10/2018 BY KBX Total Acres: 0.67 Total Land Value: 23,450 Market: 0 Agricultural: 0 Common: 23,450 PRINTED 08/02/2023 BY SYS