PT OF NE1/4 OF NW1/4
IN OR 2636/1981

HICKS CYNTHIA LEWIS
54758 SHEFFIELD RD
CALLAHAN, FL 32011

2023

18-4N-25-0000-0003-0020

BUILDING CHARACTERISTICS

ELEMENT	CD	CONSTRUCTION
Exterior Wall	15	CONC BLOCK 100
Roof Structur	03	GABLE/HIP 100
Roof Cover	12	MODULAR MT 100
Interior Wall	05	DRYWALL 60
Interior Wall	04	PLYWOOD 40
Interior Floo	08	SHT VINYL 70
Interior Floo	03	CONC FINSH 30
Air Condition	03	CENTRAL 100
Heating Type	04	AIR DUCTED 100
Bedrooms		3 100
Bathrooms		3 100
Frame	02	WOOD FRAME 100
Stories	1.	1. 100
Units		0 100
Occupancy	00	NONE 100
Quality	03	Quality Level 03
DOR CODE	0100	SINGLE FAMILY
MAP NUM		MKT AREA 05
NEIGHBORHOOD/LOC	5001.00	

AREA TYPE	TOTAL GROSS AREA	PCT OF BASE	TOT ADJ AREA	SUBAREA MARKET VALUE
BAS	428	100	428	29,395
BAS	1,457	100	1,457	100,067
FCP	506	25	126	8,654
FEP	140	80	112	7,692
FOP	40	30	12	824
FOP	96	30	29	1,992
FST	120	55	66	4,533
UOP	400	20	80	5,495
TOTALS	3,187		2,310	158,652

MARKET ADJUSTMENTS

TYPE	MDL	EFF. AREA	TOT ADJ PTS	EFF. BASE RATE	REPL. COST NEW	AYB	EYB	ECON	FNCT		NORM	% COND
0100	01	2,310	98.1960	88.62	204,712	1977	1977	0	0	0	22.50	77.50

1 SINGLE FAM – 100% - 2023 Heated Area: 1885 HX Base Yr 2023

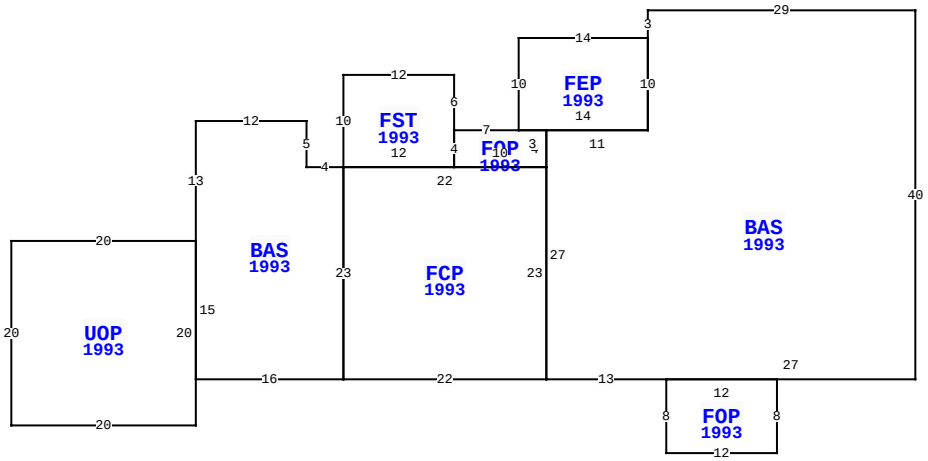

376976 KINGS FERRY RD, HILLIARD

BLD DATE		LGL DATE	
XF DATE		LAND DATE	
INC DATE		AG DATE	

NASSAU COUNTY PROPERTY

PAGE 1 of 1 4

VALUATION SUMMARY

VALUATION BY		STANDARD
Tax Group: 4	Tax Dist:	
BUILDING MARKET VALUE		158,652
TOTAL MARKET OB/XF VALUE		2,005
TOTAL LAND VALUE - MARKET		35,000
TOTAL MARKET VALUE		195,657
SOH/AGL Deduction		0
ASSESSED VALUE		195,657
TOTAL EXEMPTION VALUE	HX HB	50,000
BASE TAXABLE VALUE		145,657
TOTAL JUST VALUE		195,657
NCON VALUE		0
INCOME VALUE		
PREVIOUS YEAR MKT VALUE		254,720

BLDG:1:2: 1BD/1BTH IN BAS93 (AS STRG) BETWEEN FCP

12/22KW: OWNERS (1) WELLS FOR BOTH: 376976 + 37690

PERMIT NUM	DESCRIPTION	AMT	ISSUED
22008083	NEW CONSTR	189,684	05/24/2022

SALES DATA

OFF RECORD Number	DATE	TYPE INST	Q U	V I	RSN CD	SALE PRICE
2636/1981	5/01/2023	WD	Q	I	01	75,000

GRANTOR: LEWIS KIMBERLY SUZANN

GRANTEE: HICKS CYNTHIA LEWIS

2611/1735	1/05/2023	QC	U	I	11	100

GRANTOR: LEWIS KIMBERLY SUZANN

GRANTEE: WISE KATE MARIE

BUILDING NOTES

BUILDING DIMENSIONS

BAS=[YR=1993] W29 S3 FEP=[YR=1993] W14 S10 FOP=[YR=1993] W7 FST=[YR=1993] N6 W12 S10 BAS=[YR=1993] W4 N5 W12 S13 UOP=[YR=1993] W20 S20 E20 N20$ S15 E16 N23$ FCP=[YR=1993] S23 E22 N23 W22 $ E12 N4$ S4 E10 N4 W3$ E14 N10$ S10 W11 S27 E13 FOP=[YR=1993] S8 E12 N8 W12$ E27 N40$.

EXTRA FEATURES

LN	OB/XF CODE	DESCRIPTION	BLD	CAP	L	W	UNITS	UT	Adj R	ADJ UNIT PRICE	ORIG COND	YEAR ON	YEAR ACTUAL	Q	% COND	OB/XF MKT VALUE	NOTES
4	0351	CARPORT MT	0	100	20	20	400.00	SF	4.00	4.00	100	1995	1995	3	20	320	
5	0810	CONCRETE A	0	100	20	18	360.00	SF	6.50	6.50	100	1995	1995	3	72	1,685	

LAND DESCRIPTION

TOTAL OB/XF 2,005

LN	USE CODE	CLS	LAND USE DESCRIPTION	CAP	RD	LOC ZONE	FRONT	DEPTH	TOT LND UTS	UNIT TYPE	DT	DPTH FACT	% COND	TOT ADJ	UNIT PRICE	ADJ UNIT PRICE	LAND VALUE	OTHER ADJUSTMENTS AND NOTES	YEAR	DENSITY	DECL	FRZ	YR	CONSRV
1	000115	C	SFR ACRES	100	0006	OR	0.00	0.00	1.00	AC		1.00	1.00	1.00	35,000.00	35,000.00	35,000							

REVIEW DATE 07/28/2023 BY KW Total Acres: 1.00 Total Land Value: 35,000 Market: 0 Agricultural: 0 Common: 35,000 PRINTED 08/02/2023 BY SYS