PT OF LOT 47 &
ALL OF LOTS 48 & 49
IN OR 1942/1215

HODGES WILLIAM M
75896 JOHNSON LAKE RD
YULEE, FL 32097

2023

18-2N-27-4315-0047-0020

NASSAU COUNTY PROPERTY

BUILDING CHARACTERISTICS

ELEMENT	CD	CONSTRUCTION
Exterior Wall	05	AVERAGE 60
Exterior Wall	16	WD FR STUC 40
Roof Structur	03	GABLE/HIP 100
Roof Cover	03	COMP SHNGL 100
Interior Wall	05	DRYWALL 100
Interior Floo	12	HARDWOOD 60
Interior Floo	11	CLAY TILE 40
Air Condition	03	CENTRAL 100
Heating Type	04	AIR DUCTED 100
Bedrooms		3 100
Bathrooms		2 100
Frame	02	WOOD FRAME 100
Stories	2.	2. 100
Units		0 100
BUD8 Adjustme	04	DIST 01 100
Occupancy	00	NONE 100
Quality	03	Quality Level 03
DOR CODE	0100	SINGLE FAMILY
MAP NUM		MKT AREA 05
NEIGHBORHOOD/LOC	5010.00	

AREA TYPE	TOTAL GROSS AREA	PCT OF BASE	TOT ADJ AREA	SUBAREA MARKET VALUE
BAS	1,388	100	1,388	117,125
BAS	574	100	574	48,436
DCK	196	10	20	1,688
FCP	650	25	162	13,670
FGR	164	55	90	7,594
FOP	198	30	59	4,979
UOP	28	20	6	506
TOTALS	3,198		2,299	193,999

MARKET ADJUSTMENTS

TYPE	MDL	EFF. AREA	TOT ADJ PTS	EFF. BASE RATE	REPL. COST NEW	AYB	EYB	ECON	FNCT		NORM	% COND
0100	01	2,299	112.1120	101.18	232,613	1987	1987	0	0	0	16.60	83.40

1 SINGLE FAM – 100% - 2015 Heated Area: 1962 HX Base Yr 2015

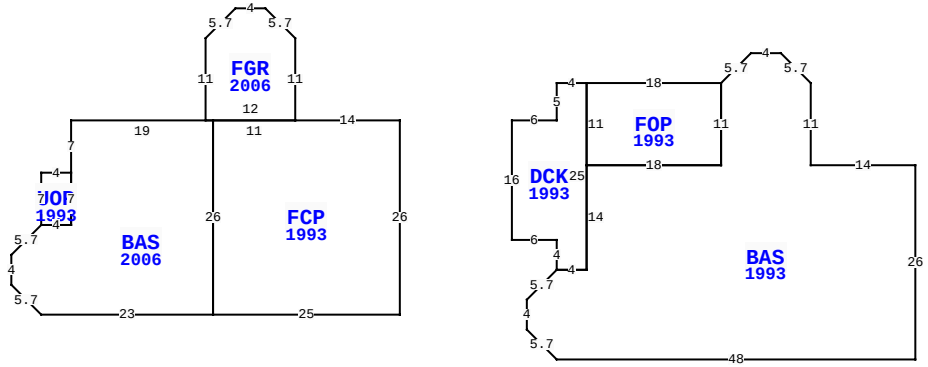

75896 JOHNSON LAKE RD, YULEE

BLD DATE		LGL DATE	
XF DATE		LAND DATE	
INC DATE		AG DATE	

VALUATION SUMMARY

VALUATION BY		STANDARD
Tax Group: 4	Tax Dist:	
BUILDING MARKET VALUE		224,486
TOTAL MARKET OB/XF VALUE		4,783
TOTAL LAND VALUE - MARKET		130,000
TOTAL MARKET VALUE		359,269
SOH/AGL Deduction		157,285
ASSESSED VALUE		201,984
TOTAL EXEMPTION VALUE	HX HB	50,000
BASE TAXABLE VALUE		151,984
TOTAL JUST VALUE		359,269
NCON VALUE		0
INCOME VALUE		
PREVIOUS YEAR MKT VALUE		324,758

PERMIT NUM	DESCRIPTION	AMT	ISSUED
20011805	MTL GAR	30,000	11/30/2020
V9800010	REMODEL	0	08/01/1998
3542	N/A	33,940	08/04/1986

SALES DATA

OFF RECORD Number	DATE	TYPE INST	Q U	V I	RSN CD	SALE PRICE
1942/1215	9/26/2014	SW	U	I	12	124,000
GRANTOR: GMAT LEGAL TITLE TRUS						
GRANTEE: HODGES WILLIAM M						
1919/0271	5/27/2014	CT	U	I	18	100
GRANTOR: CLERK OF COURT						
GRANTEE: GMAT LEGAL TITLE TR						

BUILDING NOTES

BUILDING DIMENSIONS

FCP=[YR=1993] W14 FGR=[YR=2006] N11 L4 U4 W4 D4 L4 S11 E12 $ W11 BAS=[YR=2006] W19 S7 UOP=[YR=1993] W4 S7 E4 N7 $ S7 W4 D4 L4 S4 R4 D4 E23 N26 $ S26 E25 N26$ PTR= E15 DCK=[YR=1993] E6 N5 E4 FOP=[YR=1993] E18BAS=[YR=1993] R4 U4 E4 D4 R4 S11 E14 S26 W48 U4 L4 N4 R4 U4 E4 N14 E18 N11 $ S11 W18 N11 $ S25 W4 N4 W6 N16 $ W15 $.

EXTRA FEATURES

LN	OB/XF CODE	DESCRIPTION	BLD	CAP	L	W	UNITS	UT	Adj R	ADJ UNIT PRICE	ORIG COND	YEAR ON	YEAR ACTUAL	Q	% COND	OB/XF MKT VALUE	NOTES
1	0940	SHEDS/PORT	0	100	12	14	168.00	SF	30.00	30.00	100	1985	1985	3	20	1,008	
3	1242	WD DECK A	0	100	0	0	371.00	SF	10.00	10.00	100	1985	1985	3	20	742	
5	0810	CONCRETE A	0	100	0	0	486.00	SF	6.50	6.50	100	2015	2015	3	96	3,033	

LAND DESCRIPTION

TOTAL OB/XF 4,783

LN	USE CODE	CLS	LAND USE DESCRIPTION	CAP	RD	LOC ZONE	FRONT	DEPTH	TOT LND UTS	UNIT TYPE	DT	DPTH FACT	% COND	TOT ADJ	UNIT PRICE	ADJ UNIT PRICE	LAND VALUE	OTHER ADJUSTMENTS AND NOTES	YEAR	DENSITY	DECL	FRZ	YR	CONSRV
1	000133	C	SFR LAKE	100		RM	200.00	180.00	2.00	LT		1.00	1.00	1.00	65,000.00	65,000.00	130,000							

REVIEW DATE 04/08/2021 BY NW Total Acres: 0.00 Total Land Value: 130,000 Market: 0 Agricultural: 0 Common: 130,000 PRINTED 08/02/2023 BY SYS

PT OF LOT 47 &
ALL OF LOTS 48 & 49
IN OR 1942/1215

HODGES WILLIAM M
75896 JOHNSON LAKE RD
YULEE, FL 32097

2023

18-2N-27-4315-0047-0020

BUILDING CHARACTERISTICS

ELEMENT	CD	CONSTRUCTION
Exterior Wall	25	MOD METAL 100
Roof Structur	10	STEEL FRME 100
Roof Cover	12	MODULAR MT 100
Interior Wall	07	NONE 100
Interior Floo	03	CONC FINSH 100
Air Condition	01	NONE 100
Heating Type	01	NONE 100
Bedrooms		0 100
Bathrooms		0 100
Frame	05	STEEL 100
Stories	0	0 100
Units		0 100
Occupancy	00	NONE 100
Quality	06	Quality Level 06

DOR CODE 0100 SINGLE FAMILY
MAP NUM | MKT AREA 05
NEIGHBORHOOD/LOC 5010.00

AREA TYPE	TOTAL GROSS AREA	PCT OF BASE	TOT ADJ AREA	SUBAREA MARKET VALUE
BAS	1,500	100	1,500	30,487
TOTALS	1,500		1,500	30,487

MARKET ADJUSTMENTS

TYPE	MDL	EFF. AREA	TOT ADJ PTS	EFF. BASE RATE	REPL. COST NEW	AYB	EYB	ECON	FNCT		NORM	% COND
6500	01	1,500	58.6500	20.53	30,795	2021	2021	0	0	0	1.00	99.00

2 GARAGE RES – 100% - 2015 Heated Area: 1500 HX Base Yr 2015

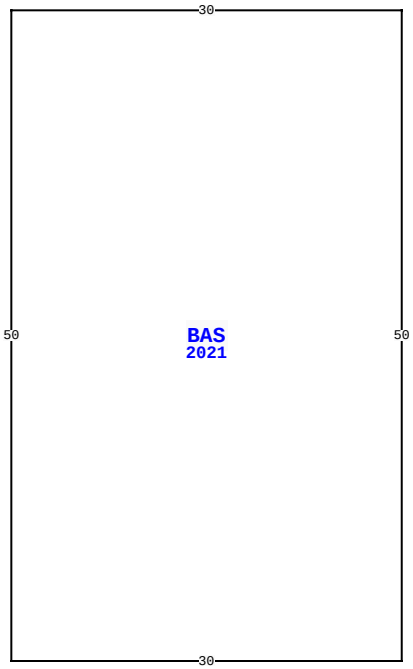

75896 JOHNSON LAKE RD, YULEE

BLD DATE		LGL DATE	
XF DATE		LAND DATE	
INC DATE		AG DATE	

NASSAU COUNTY PROPERTY

PAGE 2 of 2 4

VALUATION SUMMARY

VALUATION BY		STANDARD
Tax Group: 4	Tax Dist:	
BUILDING MARKET VALUE		224,486
TOTAL MARKET OB/XF VALUE		4,783
TOTAL LAND VALUE - MARKET		130,000
TOTAL MARKET VALUE		359,269
SOH/AGL Deduction		157,285
ASSESSED VALUE		201,984
TOTAL EXEMPTION VALUE	HX HB	50,000
BASE TAXABLE VALUE		151,984
TOTAL JUST VALUE		359,269
NCON VALUE		0
INCOME VALUE		
PREVIOUS YEAR MKT VALUE		324,758

PERMIT NUM	DESCRIPTION	AMT	ISSUED

SALES DATA

OFF RECORD Number	DATE	TYPE INST	Q / U	V / I	RSN CD	SALE PRICE
1942/1215	9/26/2014	SW	U	I	12	124,000
GRANTOR: GMAT LEGAL TITLE TRUS						
GRANTEE: HODGES WILLIAM M						
1919/0271	5/27/2014	CT	U	I	18	100
GRANTOR: CLERK OF COURT						
GRANTEE: GMAT LEGAL TITLE TR						

BUILDING NOTES

BUILDING DIMENSIONS

BAS=[YR=2021] W30 S50 E30 N50$.

EXTRA FEATURES

L N	OB/XF CODE	DESCRIPTION	BLD	CAP	L	W	UNITS	UT	Adj R	ADJ UNIT PRICE	ORIG COND	YEAR ON	YEAR ACTUAL	Q	% COND	OB/XF MKT VALUE	NOTES

LAND DESCRIPTION

TOTAL OB/XF 0

L N	USE CODE	CLS	LAND USE DESCRIPTION	CAP	R D	LOC ZONE	FRONT	DEPTH	TOT LND UTS	UNIT TYPE	D T	DPTH FACT	% COND	TOT ADJ	UNIT PRICE	ADJ UNIT PRICE	LAND VALUE	OTHER ADJUSTMENTS AND NOTES	YEAR	DENSITY	DECL	FRZ	YR	CONSRV

REVIEW DATE 04/08/2021 BY NW Total Acres: 0.00 Total Land Value: 130,000 Market: 0 Agricultural: 0 Common: 130,000 PRINTED 08/02/2023 BY SYS