PT OR 979/1752 & PT 1419/1753
EX R/W OR 248/385

LEWIS ERIC
376866 KINGS FERRY RD
HILLIARD, FL 32046

2023

17-4N-25-0000-0006-0000

BUILDING CHARACTERISTICS

ELEMENT	CD	CONSTRUCTION
Exterior Wall	05	AVERAGE 100
Roof Structur	03	GABLE/HIP 100
Roof Cover	01	MINIMUM 100
Interior Wall	05	DRYWALL 100
Interior Floo	09	PINE WOOD 100
Air Condition	01	NONE 100
Heating Type	02	CONVECTION 100
Bedrooms		3 100
Bathrooms		1 100
Frame	02	WOOD FRAME 100
Stories	1.	1. 100
Units		0 100
BUD8 Adjustme	04	DIST 01 100
Occupancy	00	NONE 100
Quality	03	Quality Level 03
DOR CODE	5000	IMPROVED AG
MAP NUM		MKT AREA 05
NEIGHBORHOOD/LOC	5001.00	

AREA TYPE	TOTAL GROSS AREA	PCT OF BASE	TOT ADJ AREA	SUBAREA MARKET VALUE
BAS	1,184	100	1,184	71,883
FEP	176	80	141	8,560
FEP	180	80	144	8,743
UGR	784	45	353	21,432
UOP	169	20	34	2,064
UST	36	45	16	972
TOTALS	2,529		1,872	113,653

MARKET ADJUSTMENTS

TYPE	MDL	EFF. AREA	TOT ADJ PTS	EFF. BASE RATE	REPL. COST NEW	AYB	EYB	ECON	FNCT		NORM	% COND
0100	01	1,872	90.0000	81.22	152,044	1940	1950	0	0	0	25.25	74.75

1 SINGLE FAM – 0% - 2023 Heated Area: 1184 HX Base Yr

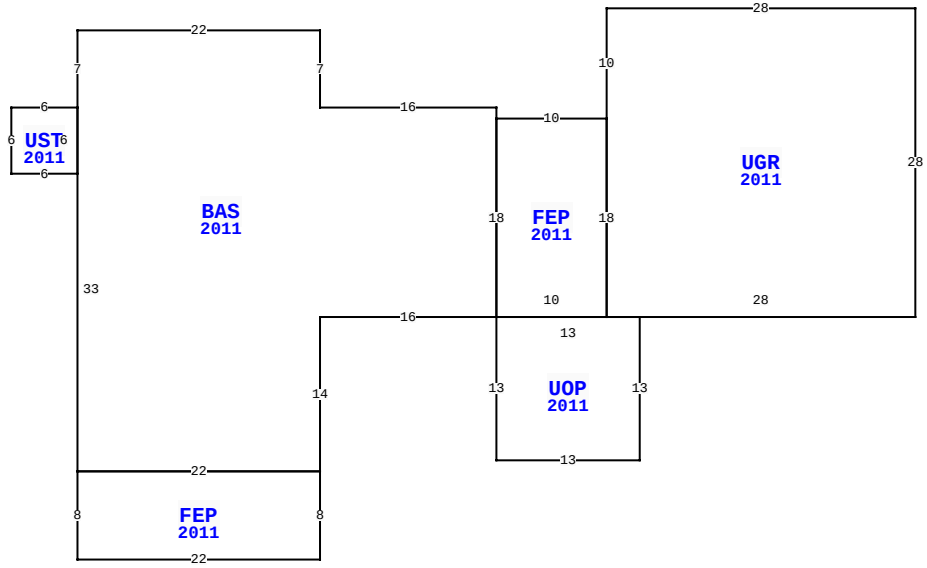

475564 MIDDLE RD, HILLIARD

BLD DATE		LGL DATE	
XF DATE		LAND DATE	05/30/2023 MLU
INC DATE		AG DATE	

NASSAU COUNTY PROPERTY

PAGE 1 of 1 4

VALUATION SUMMARY

VALUATION BY	STANDARD
Tax Group: 4	Tax Dist:
BUILDING MARKET VALUE	113,653
TOTAL MARKET OB/XF VALUE	6,702
TOTAL LAND VALUE - MARKET	580,100
TOTAL MARKET VALUE	209,579
SOH/AGL Deduction	0
ASSESSED VALUE	209,579
TOTAL EXEMPTION VALUE	0
BASE TAXABLE VALUE	209,579
TOTAL JUST VALUE	700,455
NCON VALUE	0
INCOME VALUE	
PREVIOUS YEAR MKT VALUE	120,197

PERMIT NUM	DESCRIPTION	AMT	ISSUED

SALES DATA

OFF RECORD Number	DATE	TYPE INST	Q U /	V I /	RSN CD	SALE PRICE
2581/1550	7/28/2022	QC	U	I	11	100
GRANTOR: CLEMONS KIMBERLY & CY						
GRANTEE: LEWIS ERIC						
2522/0463	12/14/2021	QC	U	I	11	100
GRANTOR: LEWIS RAYMOND E EST						
GRANTEE: LEWIS ERIC						

BUILDING NOTES

BUILDING DIMENSIONS

UGR=[YR=2011] W28 S10 FEP=[YR=2011] W10 BAS=[YR=2011] N1 W16 N7 W22 S7 UST=[YR=2011] W6 S6 E6 N6$ S33 FEP=[YR=2011] S8 E22 N8 W22$ E22 N14 E16 N18$ S18 UOP=[YR=2011] S13 E13 N13 W13$ E10 N18 $ S18 E28 N28 $.

EXTRA FEATURES

LN	OB/XF CODE	DESCRIPTION	BLD	CAP	L	W	UNITS	UT	Adj R	ADJ UNIT PRICE	ORIG COND	YEAR ON	YEAR ACTUAL	Q	% COND	OB/XF MKT VALUE	NOTES
1	0680	POLE SHED	0	0	0	0	400.00	SF	10.00	10.00	100	1980	1980	3	20	800	
2	0680	POLE SHED	0	0	0	0	100.00	SF	10.00	10.00	100	1980	1980	3	20	200	
3	0204	BARN MTL 1	0	0	46	38	1,748.00	SF	16.00	16.00	100	1980	1980	3	20	5,594	
4	0751	UOP	0	0	8	9	72.00	SF	5.00	5.00	100	2001	2001	3	30	108	

LAND DESCRIPTION

TOTAL OB/XF 6,702

LN	USE CODE	CLS	LAND USE DESCRIPTION	CAP	RD	LOC ZONE	FRONT	DEPTH	TOT LND UTS	UNIT TYPE	DT	DPTH FACT	% COND	TOT ADJ	UNIT PRICE	ADJ UNIT PRICE	LAND VALUE	OTHER ADJUSTMENTS AND NOTES	YEAR	DENSITY	DECL	FRZ	YR	CONSRV
1	005000	C	RURAL HOME	0	0006	OR	0.00	0.00	1.00	AC		1.00	1.00	1.00	35,000.00	35,000.00	35,000							
2	006000	A	PAST1/HAY	0		OR	0.00	0.00	18.00	AC		1.00	1.00	1.00	440.00	440.00	7,920							
3	005500	A	TIMBER 2 SI	0		OR	0.00	0.00	81.00	AC		1.00	1.00	1.00	550.00	550.00	44,550							
4	005902	A	HARDWOOD SI	0		OR	0.00	0.00	10.02	AC		1.00	1.00	1.00	175.00	175.00	1,754							
5	009910	M	MKT.VAL.AG	0		OR	0.00	0.00	109.02	AC		1.00	1.00	1.00	5,000.00	5,000.00	545,100							

REVIEW DATE 08/03/2020 BY KBA Total Acres: 110.02 Total Land Value: 89,224 Market: 545,100 Agricultural: 54,224 Common: 35,000 PRINTED 08/02/2023 BY SYS