LOT 7
IN OR 2199/1982
CEDAR HAVEN #2 PB 6/380

MAZE EUGENE C
27087 COUNTRY DRIVE
HILLIARD, FL 32046

2023

17-3N-24-022D-0007-0000

NASSAU COUNTY PROPERTY

BUILDING CHARACTERISTICS

ELEMENT	CD	CONSTRUCTION
Exterior Wall	20	FACE BRICK 100
Roof Structur	08	IRREGULAR 100
Roof Cover	03	COMP SHNGL 100
Interior Wall	05	DRYWALL 100
Interior Floo	12	HARDWOOD 80
Interior Floo	11	CLAY TILE 20
Air Condition	03	CENTRAL 100
Heating Type	04	AIR DUCTED 100
Bedrooms		3 100
Bathrooms		2 100
Frame	02	WOOD FRAME 100
Stories	1.	1. 100
Units		0 100
Occupancy	00	NONE 100
Quality	06	Quality Level 06
DOR CODE	0100	SINGLE FAMILY
MAP NUM		MKT AREA 06
NEIGHBORHOOD/LOC	6003.00	

AREA TYPE	TOTAL GROSS AREA	PCT OF BASE	TOT ADJ AREA	SUBAREA MARKET VALUE
BAS	1,771	100	1,771	183,232
FGR	528	55	290	30,004
FOP	30	30	9	931
FSP	140	40	56	5,794
PTO	250	5	12	1,241
TOTALS	2,719		2,138	221,203

MARKET ADJUSTMENTS

TYPE	MDL	EFF. AREA	TOT ADJ PTS	EFF. BASE RATE	REPL. COST NEW	AYB	EYB	ECON	FNCT		NORM	% COND
0100	01	2,138	132.5352	119.61	255,726	2004	2004	0	0	0	13.50	86.50

1 SINGLE FAM – 100% - 2019 Heated Area: 1771 HX Base Yr 2019

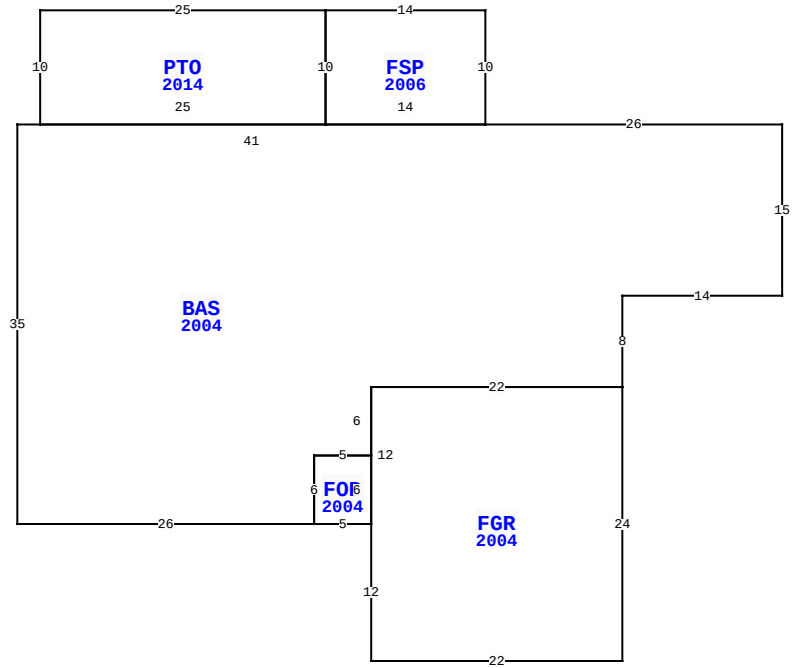

27087 COUNTRY DR, HILLIARD

BLD DATE		LGL DATE	
XF DATE		LAND DATE	
INC DATE		AG DATE	

VALUATION SUMMARY

VALUATION BY		STANDARD
Tax Group: 3	Tax Dist:	
BUILDING MARKET VALUE		221,203
TOTAL MARKET OB/XF VALUE		4,204
TOTAL LAND VALUE - MARKET		24,000
TOTAL MARKET VALUE		249,407
SOH/AGL Deduction		98,708
ASSESSED VALUE		150,699
TOTAL EXEMPTION VALUE	HX HB WR	55,000
BASE TAXABLE VALUE		95,699
TOTAL JUST VALUE		249,407
NCON VALUE		0
INCOME VALUE		
PREVIOUS YEAR MKT VALUE		211,924

PERMIT NUM	DESCRIPTION	AMT	ISSUED
0510355	ADDITION	0	11/08/2005

SALES DATA

OFF RECORD Number	DATE	TYPE INST	Q U	V I	RSN CD	SALE PRICE
2199/1982	5/30/2018	WD	Q	I	02	185,000
GRANTOR: MILLER DENNIS J & MIC						
GRANTEE: MAZE EUGENE C						
1912/0193	4/01/2014	WD	Q	I	01	125,000
GRANTOR: PERKINS RYAN E & JENN						
GRANTEE: MILLER DENNIS J						

BUILDING NOTES

BUILDING DIMENSIONS

BAS=[YR=2004] W26 FSP=[YR=2006] N10 W14 PTO=[YR=2014] W25 S10 E25 N10$ S10 E14$ W41 S35 E26 FOP=[YR=2004] E5 FGR=[YR=2004] S12 E22 N24 W22 S12$ N6 W5 S6$ N6 E5 N6 E22 N8 E14 N15$.

EXTRA FEATURES

LN	OB/XF CODE	DESCRIPTION	BLD	CAP	L	W	UNITS	UT	Adj R	ADJ UNIT PRICE	ORIG COND	YEAR ON	YEAR ACTUAL	Q	% COND	OB/XF MKT VALUE	NOTES
1	0812	CONCRETE C	0	100	0	0	1,173.00	SF	4.00	4.00	100	2004	2004	3	86	4,035	
3	1127	BRICK 8"	0	100	0	0	32.00	SF	5.50	5.50	100	2004	2004	3	96	169	

LAND DESCRIPTION

TOTAL OB/XF 4,204

LN	USE CODE	CLS	LAND USE DESCRIPTION	CAP	RD	LOC ZONE	FRONT	DEPTH	TOT LND UTS	UNIT TYPE	DT	DPTH FACT	% COND	TOT ADJ	UNIT PRICE	ADJ UNIT PRICE	LAND VALUE	OTHER ADJUSTMENTS AND NOTES	YEAR	DENSITY	DECL	FRZ	YR	CONSRV
1	000100	C	SFR	100	0006	RS-2	0.00	0.00	1.00	LT		1.00	1.00	1.00	24,000.00	24,000.00	24,000							

REVIEW DATE 03/23/2018 BY TWX Total Acres: 0.00 Total Land Value: 24,000 Market: 0 Agricultural: 0 Common: 24,000 PRINTED 08/02/2023 BY SYS