IN OR 1316/275

DINWIDDIE BERNITA K
P O BOX 520
HILLIARD, FL 32046

**2023**

**17-3N-24-0000-0005-0000**

## BUILDING CHARACTERISTICS

| ELEMENT | CD | CONSTRUCTION |
|---|---|---|
| Exterior Wall | 20 | FACE BRICK 80 |
| Exterior Wall | 05 | AVERAGE 20 |
| Roof Structur | 03 | GABLE/HIP 100 |
| Roof Cover | 03 | COMP SHNGL 100 |
| Interior Wall | 04 | PLYWOOD 50 |
| Interior Wall | 05 | DRYWALL 50 |
| Interior Floo | 14 | CARPET 70 |
| Interior Floo | 08 | SHT VINYL 30 |
| Air Condition | 03 | CENTRAL 100 |
| Heating Type | 04 | AIR DUCTED 100 |
| Bedrooms | | 3 100 |
| Bathrooms | | 2 100 |
| Frame | 02 | WOOD FRAME 100 |
| Stories | 1. | 1. 100 |
| Units | | 0 100 |
| BUD8 Adjustme | 03 | DIST HI 100 |
| Occupancy | 00 | NONE 100 |
| Quality | 03 | Quality Level 03 |
| DOR CODE | 0100 | SINGLE FAMILY |
| MAP NUM | | MKT AREA 06 |
| NEIGHBORHOOD/LOC | 6001.00 | |

| AREA TYPE | TOTAL GROSS AREA | PCT OF BASE | TOT ADJ AREA | SUBAREA MARKET VALUE |
|---|---|---|---|---|
| BAS | 2,118 | 100 | 2,118 | 142,855 |
| FGR | 483 | 55 | 266 | 17,941 |
| FOP | 150 | 30 | 45 | 3,035 |
| FSP | 264 | 40 | 106 | 7,149 |
| USP | 216 | 30 | 65 | 4,384 |
| UST | 70 | 45 | 32 | 2,159 |
| TOTALS | 3,301 | | 2,632 | 177,524 |

## MARKET ADJUSTMENTS

| TYPE | MDL | EFF. AREA | TOT ADJ PTS | EFF. BASE RATE | REPL. COST NEW | AYB | EYB | ECON | FNCT | | NORM | % COND |
|---|---|---|---|---|---|---|---|---|---|---|---|---|
| 0100 | 01 | 2,632 | 102.1440 | 92.18 | 242,618 | 1980 | 1980 | 0 | 0 | 0 | 26.83 | 73.17 |

1 SINGLE FAM – 100% - 2006 Heated Area: 2118 HX Base Yr 2006

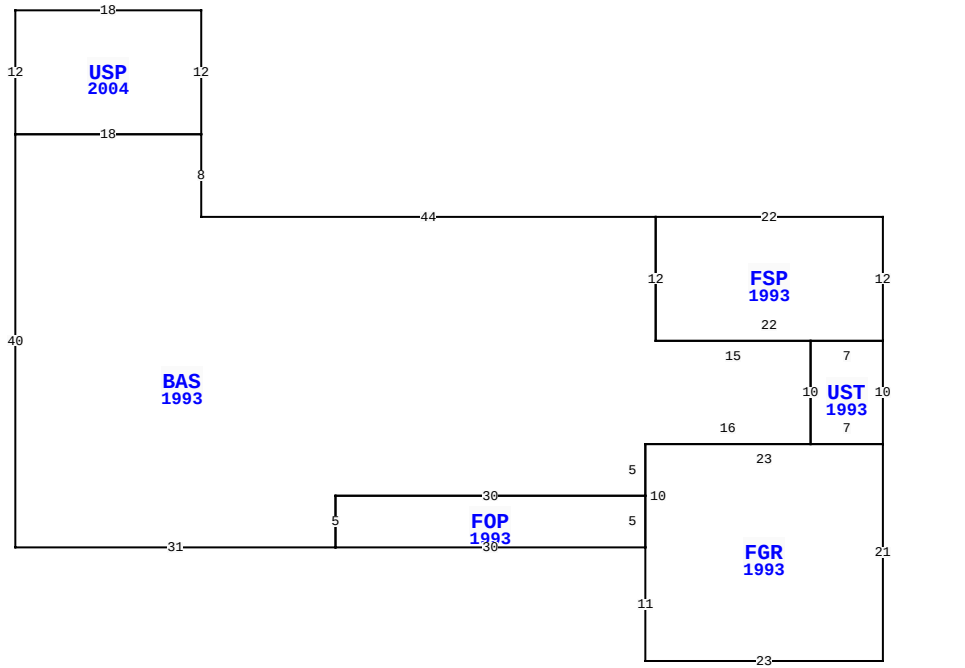


3782 AZALEA DR, HILLIARD

| | | | |
|---|---|---|---|
| BLD DATE | | LGL DATE | 05/18/2023 MLU |
| XF DATE | | LAND DATE | |
| INC DATE | | AG DATE | |

## NASSAU COUNTY PROPERTY

PAGE 1 of 1 3

### VALUATION SUMMARY

| | | |
|---|---|---|
| VALUATION BY | | STANDARD |
| Tax Group: 3 | Tax Dist: | |
| BUILDING MARKET VALUE | | 177,524 |
| TOTAL MARKET OB/XF VALUE | | 20,391 |
| TOTAL LAND VALUE - MARKET | | 81,180 |
| TOTAL MARKET VALUE | | 279,095 |
| SOH/AGL Deduction | | 124,356 |
| ASSESSED VALUE | | 154,739 |
| TOTAL EXEMPTION VALUE | HX HB WX | 55,000 |
| BASE TAXABLE VALUE | | 99,739 |
| TOTAL JUST VALUE | | 279,095 |
| NCON VALUE | | 0 |
| INCOME VALUE | | |
| PREVIOUS YEAR MKT VALUE | | 228,288 |

| PERMIT NUM | DESCRIPTION | AMT | ISSUED |
|---|---|---|---|
| 20120086 | CARPORT | 1,000 | 06/05/2012 |

## SALES DATA

| OFF RECORD Number | DATE | TYPE INST | Q U | V I | RSN CD | SALE PRICE |
|---|---|---|---|---|---|---|
| 1316/0275 | 5/09/2005 | WD | Q | I | | 215,000 |
| GRANTOR: WHITTEMORE WILMA J | | | | | | |
| GRANTEE: DINWIDDIE BERNITA K | | | | | | |
| 0385/0805 | 5/01/1983 | WD | Q | I | | 82,000 |
| GRANTOR: | | | | | | |
| GRANTEE: | | | | | | |

## BUILDING NOTES

## BUILDING DIMENSIONS

FSP=[YR=1993] W22 BAS=[YR=1993] W44 N8 USP=[YR=2004] N12 W18 S12 E18$ W18 S40 E31 FOP=[YR=1993] E30 FGR=[YR=1993] S11 E23 N21 UST=[YR=1993] N10 W7 S10 E7$ W23 S10$ N5 W30 S5$ N5 E30 N5 E16 N10 W15 N12$ S12 E22 N12$ .

## EXTRA FEATURES

| LN | OB/XF CODE | DESCRIPTION | BLD | CAP | L | W | UNITS | UT | Adj R | ADJ UNIT PRICE | ORIG COND | YEAR ON | YEAR ACTUAL | Q | % COND | OB/XF MKT VALUE | NOTES |
|---|---|---|---|---|---|---|---|---|---|---|---|---|---|---|---|---|---|
| 1 | 0500 | FP-PRE FAB | 0 | 100 | 0 | 0 | 1.00 | UT | 3,500.00 | 3,500.00 | 100 | 1980 | 1980 | 3 | 49 | 1,715 | |
| 2 | 0810 | CONCRETE A | 0 | 100 | 20 | 20 | 400.00 | SF | 6.50 | 6.50 | 100 | 1980 | 1980 | 3 | 35 | 910 | |
| 3 | 0810 | CONCRETE A | 0 | 100 | 20 | 20 | 400.00 | SF | 6.50 | 6.50 | 100 | 1998 | 1998 | 3 | 77 | 2,002 | |
| 4 | 0752 | USP | 0 | 100 | 30 | 20 | 600.00 | SF | 15.00 | 15.00 | 100 | 1998 | 1998 | 3 | 27 | 2,430 | |
| 5 | 0940 | SHEDS/PORT | 0 | 100 | 20 | 10 | 200.00 | SF | 30.00 | 30.00 | 100 | 1998 | 1998 | 3 | 20 | 1,200 | |
| 6 | 0350 | CARPORT WD | 0 | 100 | 40 | 16 | 640.00 | SF | 9.75 | 9.75 | 100 | 2012 | 2012 | 3 | 60 | 3,744 | |
| 7 | 0350 | CARPORT WD | 0 | 100 | 40 | 16 | 640.00 | SF | 9.75 | 9.75 | 100 | 2012 | 2012 | 3 | 60 | 3,744 | |
| 8 | 0812 | CONCRETE C | 0 | 100 | 0 | 0 | 1,760.00 | SF | 3.00 | 3.00 | 100 | 2006 | 2006 | 3 | 88 | 4,646 | |

## LAND DESCRIPTION

TOTAL OB/XF 20,391

| LN | USE CODE | CLS | LAND USE DESCRIPTION | CAP | RD | LOC ZONE | FRONT | DEPTH | TOT LND UTS | UNIT TYPE | DT | DPTH FACT | % COND | TOT ADJ | UNIT PRICE | ADJ UNIT PRICE | LAND VALUE | OTHER ADJUSTMENTS AND NOTES | YEAR | DENSITY | DECL | FRZ | YR | CONSRV |
|---|---|---|---|---|---|---|---|---|---|---|---|---|---|---|---|---|---|---|---|---|---|---|---|---|
| 1 | 000115 | C | SFR ACRES | 100 | 0007 | | 0.00 | 0.00 | 4.51 | AC | | 1.00 | 1.00 | 1.00 | 18,000.00 | 18,000.00 | 81,180 | | | | | | | |

REVIEW DATE 02/06/2018 BY TWX Total Acres: 4.51 Total Land Value: 81,180 Market: 0 Agricultural: 0 Common: 81,180 PRINTED 08/02/2023 BY SYS