BLOCK 6 LOT 12 MILITARY
IN OR 1406/1752 & OR 1811/796
WOODLAND ESTATES UNIT 2

SWALLS KEITH G
44292 WOODRIDGE DR
CALLAHAN, FL 32011

2023

16-1N-25-2912-0006-0120

NASSAU COUNTY PROPERTY

BUILDING CHARACTERISTICS

ELEMENT	CD	CONSTRUCTION
Exterior Wall	05	AVERAGE 100
Roof Structur	03	GABLE/HIP 100
Roof Cover	03	COMP SHNGL 100
Interior Wall	05	DRYWALL 100
Interior Floo	13	LVT/LAMNT 80
Interior Floo	14	CARPET 20
Air Condition	03	CENTRAL 100
Heating Type	04	AIR DUCTED 100
Bedrooms		3 100
Bathrooms		2 100
Frame	02	WOOD FRAME 100
Stories	1.	1. 100
Units		0 100
BUD8 Adjustme	06	DIST 1D 100
Occupancy	00	NONE 100
Quality	05	Quality Level 05
DOR CODE	0100	SINGLE FAMILY
MAP NUM		MKT AREA 08
NEIGHBORHOOD/LOC	8005.00	

AREA TYPE	TOTAL GROSS AREA	PCT OF BASE	TOT ADJ AREA	SUBAREA MARKET VALUE
BAS	1,470	100	1,470	132,842
DCK	560	10	56	5,060
DCK	290	10	29	2,620
FOP	12	30	4	362
UCP	288	20	58	5,242
UDG	480	55	264	23,857
UGR	78	45	35	3,163
UGR	624	45	281	25,394
UOP	140	20	28	2,531
TOTALS	3,942		2,225	201,071

MARKET ADJUSTMENTS

TYPE	MDL	EFF. AREA	TOT ADJ PTS	EFF. BASE RATE	REPL. COST NEW	AYB	EYB	ECON	FNCT		NORM	% COND
0100	01	2,225	118.1488	106.63	237,252	1982	1990	0	0	0	15.25	84.75

1 SINGLE FAM – 100% - 1993 Heated Area: 1470 HX Base Yr 1993

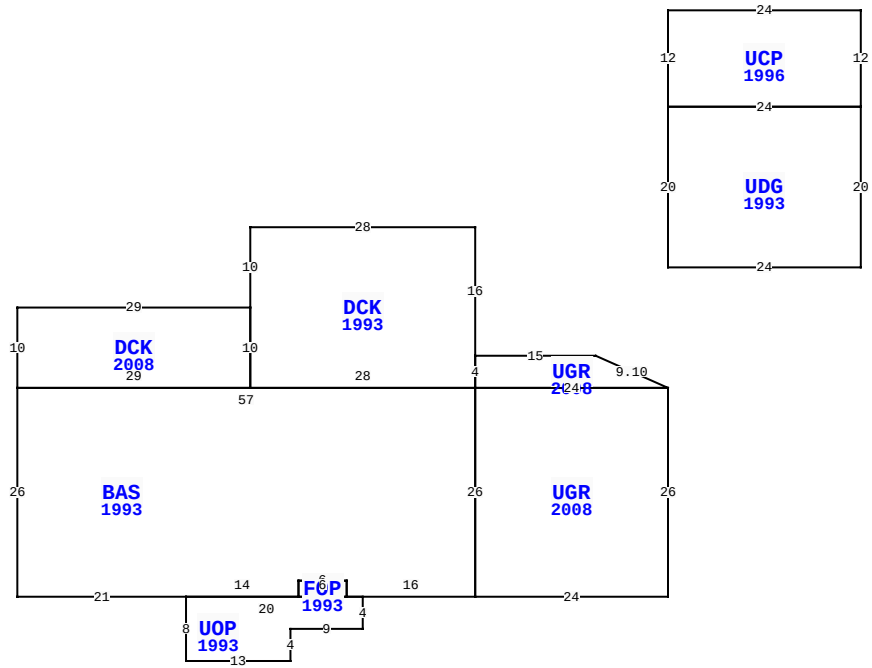

44292 WOODRIDGE DR, CALLAHAN

BLD DATE		LGL DATE	
XF DATE		LAND DATE	05/23/2023 MLU
INC DATE		AG DATE	

VALUATION SUMMARY

VALUATION BY		STANDARD
Tax Group: 6	Tax Dist:	
BUILDING MARKET VALUE		201,071
TOTAL MARKET OB/XF VALUE		0
TOTAL LAND VALUE - MARKET		50,000
TOTAL MARKET VALUE		251,071
SOH/AGL Deduction		130,824
ASSESSED VALUE		120,247
TOTAL EXEMPTION VALUE	HX HB	50,000
BASE TAXABLE VALUE		70,247
TOTAL JUST VALUE		251,071
NCON VALUE		0
INCOME VALUE		
PREVIOUS YEAR MKT VALUE		207,587

PERMIT NUM	DESCRIPTION	AMT	ISSUED
B21921	REMODEL	2,012	09/01/2008

SALES DATA

OFF RECORD Number	DATE	TYPE INST	Q U	V I	RSN CD	SALE PRICE
1811/0796	8/24/2012	QC	U	I	11	100
GRANTOR: WARREN WENDY L						
GRANTEE: SWALLS KEITH G						
1406/1752	4/26/2006	QC	U	I	01	30,000
GRANTOR: SWALLS KEITH G						
GRANTEE: SWALLS KEITH & WEND						

BUILDING NOTES

BUILDING DIMENSIONS

UGR=[YR=2008] U4 L9 W15 DCK=[YR=1993] N16 W28 S10 DCK=[YR=2008] W29 S10 BAS=[YR=1993] S26 E21 UOP=[YR=1993] S8 E13 N4 E9 N4 W2 FOP=[YR=1993] N2 W6 S2 E6$ W20$ E14 N2 E6 S2 E16 UGR=[YR=2008] E24 N26 W24 S26$ N26 W57$ E29 N10$ S10 E28 N4$ S4 E24$ PTR=N15 UDG=[YR=1993] N20 UCP=[YR=1996] N12 E24 S12 W24$ E24 S20 W24$ S15$.

EXTRA FEATURES

LN	OB/XF CODE	DESCRIPTION	BLD	CAP	L	W	UNITS	UT	Adj R	ADJ UNIT PRICE	ORIG COND	YEAR ON	YEAR ACTUAL	Q	% COND	OB/XF MKT VALUE	NOTES

LAND DESCRIPTION

TOTAL OB/XF 0

LN	USE CODE	CLS	LAND USE DESCRIPTION	CAP	RD	LOC ZONE	FRONT	DEPTH	TOT LND UTS	UNIT TYPE	DT	DPTH FACT	% COND	TOT ADJ	UNIT PRICE	ADJ UNIT PRICE	LAND VALUE	OTHER ADJUSTMENTS AND NOTES	YEAR	DENSITY	DECL	FRZ	YR	CONSRV
1	000100	C	SFR	100	0006	OR	0.00	0.00	1.00	LT		1.00	1.00	1.00	50,000.00	50,000.00	50,000							

REVIEW DATE 11/25/2019 BY KBA Total Acres: 0.00 Total Land Value: 50,000 Market: 0 Agricultural: 0 Common: 50,000 PRINTED 08/02/2023 BY SYS