LOT 33
WOODLAND ESTATES UNIT 1
PB 4/29 & 30

GOETZ CHARLES R & AMBER C
43760 FREEDOM DR
CALLAHAN, FL 32011-7278

2023

16-1N-25-2910-0033-0000

BUILDING CHARACTERISTICS

ELEMENT	CD	CONSTRUCTION
Exterior Wall	17	CB STUCCO 100
Roof Structur	06	MANSARD 100
Roof Cover	04	BUILT-UP 100
Interior Wall	05	DRYWALL 100
Interior Floo	14	CARPET 60
Interior Floo	13	LVT/LAMNT 40
Air Condition	03	CENTRAL 100
Heating Type	04	AIR DUCTED 100
Bedrooms		2 100
Bathrooms		2.5 100
Frame	02	WOOD FRAME 100
Stories	2.	2. 100
Units		0 100
BUD8 Adjustme	06	DIST 1D 100
Occupancy	00	NONE 100
Quality	03	Quality Level 03
DOR CODE	0100	SINGLE FAMILY
MAP NUM		MKT AREA 08
NEIGHBORHOOD/LOC	8005.00	

AREA TYPE	TOTAL GROSS AREA	PCT OF BASE	TOT ADJ AREA	SUBAREA MARKET VALUE
BAS	1,554	100	1,554	118,628
FEP	150	80	120	9,161
FOP	60	30	18	1,374
FOP	108	30	32	2,443
FUS	646	100	646	49,314
PTO	216	5	11	840
SFB	747	80	598	45,649
UOP	174	20	35	2,672
UOP	216	20	43	3,283
TOTALS	3,871		3,057	233,363

MARKET ADJUSTMENTS

TYPE	MDL	EFF. AREA	TOT ADJ PTS	EFF. BASE RATE	REPL. COST NEW	AYB	EYB	ECON	FNCT		NORM	% COND
0100	01	3,057	100.0960	90.34	276,169	1986	1991	0	0	0	15.50	84.50

1 SINGLE FAM – 100% - 2022 Heated Area: 2798 HX Base Yr 2022

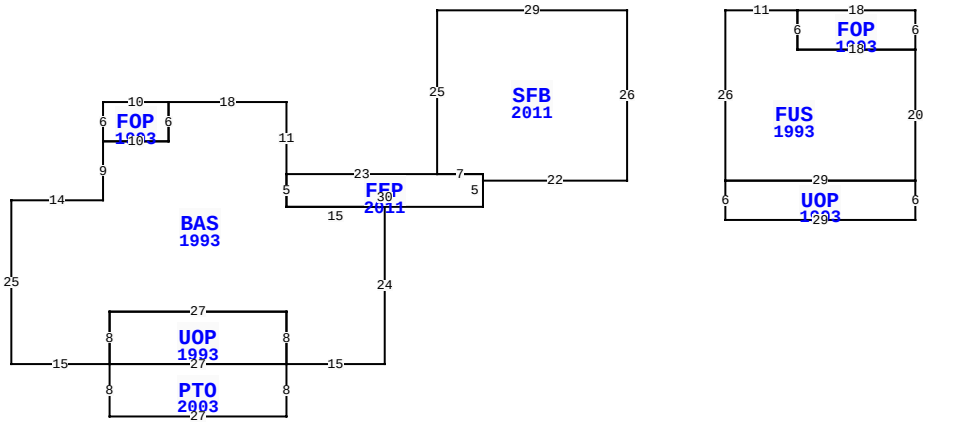

43760 FREEDOM DR, CALLAHAN

BLD DATE		LGL DATE	
XF DATE		LAND DATE	05/19/2023 MLU
INC DATE		AG DATE	

NASSAU COUNTY PROPERTY

PAGE 1 of 1 6

VALUATION SUMMARY

VALUATION BY		STANDARD
Tax Group: 6	Tax Dist:	
BUILDING MARKET VALUE		233,363
TOTAL MARKET OB/XF VALUE		27,039
TOTAL LAND VALUE - MARKET		67,968
TOTAL MARKET VALUE		328,370
SOH/AGL Deduction		33,200
ASSESSED VALUE		295,170
TOTAL EXEMPTION VALUE	HX HB	50,000
BASE TAXABLE VALUE		245,170
TOTAL JUST VALUE		328,370
NCON VALUE		0
INCOME VALUE		
PREVIOUS YEAR MKT VALUE		286,573

PERMIT NUM	DESCRIPTION	AMT	ISSUED
21013589	REPAIR/RRF	30,000	10/05/2021
B25144	ADDITION	33,394	09/01/2011
3097	N/A	13,100	11/22/1985

SALES DATA

OFF RECORD Number	DATE	TYPE INST	Q / U	V / I	RSN CD	SALE PRICE
2482/1055	7/06/2021	WD	Q	I	01	300,000
GRANTOR: ATON ROBERT D & CONNI						
GRANTEE: GOETZ CHARLES R & A						
1750/0727	8/05/2011	WD	U	I	12	180,000
GRANTOR: BLANKENSHIP GREGORY &						
GRANTEE: ATON ROBERT D & CON						

BUILDING NOTES

BUILDING DIMENSIONS

SFB=[YR=2011] W29 S25 FEP=[YR=2011] W23 BAS=[YR=1993] N11 W18 FOP=[YR=1993] W10 S6 E10 N6 $ S6 W10 S9 W14 S25 E15 PTO=[YR=2003] S8 E27 N8 UOP=[YR=1993] N8 W27 S8 E27 $ W27 $ N8 E27 S8 E15 N24 W15 N5 $ S5 E30 N5 W7 $E7 S1 E22 N26$ PTR= E15 FUS=[YR=1993] E11 FOP=[YR=1993] E18 S6 W18 N6 $ S6 E18 S20 UOP=[YR=1993] S6 W29 N6 E29 $ W29 N26 $ W15 $.

EXTRA FEATURES

LN	OB/XF CODE	DESCRIPTION	BLD	CAP	L	W	UNITS	UT	Adj R	ADJ UNIT PRICE	ORIG COND	YEAR ON	YEAR ACTUAL	Q	% COND	OB/XF MKT VALUE	NOTES
2	0500	FP-PRE FAB	0	100	0	0	1.00	UT	3,500.00	3,500.00	100	1986	1986	3	62	2,170	
4	0510	GARAGE WD-	0	100	24	35	840.00	SF	35.00	35.00	100	2011	2011	3	68	19,992	
5	0811	CONCRETE B	0	100	32	17	544.00	SF	5.20	5.20	100	2005	2005	3	87	2,461	
6	0940	SHEDS/PORT	0	100	12	22	264.00	SF	18.30	18.30	100	2010	2010	3	50	2,416	

LAND DESCRIPTION

TOTAL OB/XF 27,039

LN	USE CODE	CLS	LAND USE DESCRIPTION	CAP	RD	LOC ZONE	FRONT	DEPTH	TOT LND UTS	UNIT TYPE	DT	DPTH FACT	% COND	TOT ADJ	UNIT PRICE	ADJ UNIT PRICE	LAND VALUE	OTHER ADJUSTMENTS AND NOTES	YEAR	DENSITY	DECL	FRZ	YR	CONSRV
1	000115	C	SFR ACRES	100	0006	OR	0.00	0.00	7.08	AC		1.00	1.00	0.60	16,000.00	9,600.00	67,968							

REVIEW DATE 01/04/2022 BY KB Total Acres: 7.08 Total Land Value: 67,968 Market: 0 Agricultural: 0 Common: 67,968 PRINTED 08/02/2023 BY SYS