LOT 4
WOODLAND ESTATES UNIT 1
PB 4/29 & 30

LAMB CHRISTOPHER A & SARA
43055 HILLTOP LANE
CALLAHAN, FL 32011

2023

16-1N-25-2910-0004-0000

NASSAU COUNTY PROPERTY

BUILDING CHARACTERISTICS

ELEMENT	CD	CONSTRUCTION
Exterior Wall	20	FACE BRICK 70
Exterior Wall	05	AVERAGE 30
Roof Structur	03	GABLE/HIP 100
Roof Cover	03	COMP SHNGL 100
Interior Wall	05	DRYWALL 100
Interior Floo	14	CARPET 80
Interior Floo	11	CLAY TILE 20
Air Condition	03	CENTRAL 100
Heating Type	04	AIR DUCTED 100
Bedrooms		3 100
Bathrooms		2.5 100
Frame	02	WOOD FRAME 100
Stories	2.	2. 100
Units		0 100
Occupancy	00	NONE 100
Quality	05	Quality Level 05
DOR CODE	0100	SINGLE FAMILY
MAP NUM		MKT AREA 08
NEIGHBORHOOD/LOC	8005.00	

AREA TYPE	TOTAL GROSS AREA	PCT OF BASE	TOT ADJ AREA	SUBAREA MARKET VALUE
BAS	1,548	100	1,548	133,553
FEP	198	80	158	13,631
FOP	476	30	143	12,338
FSP	198	40	79	6,815
FUS	772	100	772	66,604
TOTALS	3,192		2,700	232,942

MARKET ADJUSTMENTS

TYPE	MDL	EFF. AREA	TOT ADJ PTS	EFF. BASE RATE	REPL. COST NEW	AYB	EYB	ECON	FNCT		NORM	% COND
0100	01	2,700	115.8432	104.55	282,285	1990	1996	0	0	0	17.48	82.52

1 SINGLE FAM – 100% - 2020 Heated Area: 2320 HX Base Yr 2020

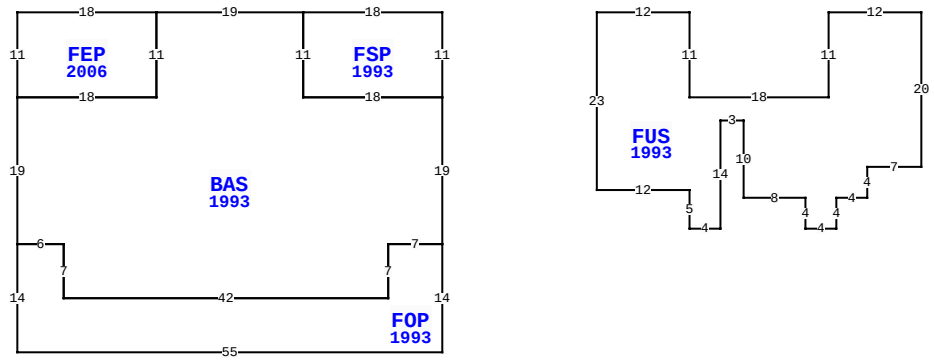

43055 HILLTOP LN, CALLAHAN

BLD DATE		LGL DATE	
XF DATE		LAND DATE	
INC DATE		AG DATE	

VALUATION SUMMARY

VALUATION BY		STANDARD
Tax Group: 6	Tax Dist:	
BUILDING MARKET VALUE		255,306
TOTAL MARKET OB/XF VALUE		6,034
TOTAL LAND VALUE - MARKET		82,080
TOTAL MARKET VALUE		343,420
SOH/AGL Deduction		103,422
ASSESSED VALUE		239,998
TOTAL EXEMPTION VALUE	HX HB	50,000
BASE TAXABLE VALUE		189,998
TOTAL JUST VALUE		343,420
NCON VALUE		0
INCOME VALUE		
PREVIOUS YEAR MKT VALUE		301,355

PERMIT NUM	DESCRIPTION	AMT	ISSUED
P14104	OTHER	0	01/01/2010
6257	NEW CONSTR	100,000	01/29/1990

SALES DATA

OFF RECORD Number	DATE	TYPE INST	Q U	V I	RSN CD	SALE PRICE
2298/1050	8/09/2019	WD	Q	I	01	315,000
GRANTOR: KARST SHIRLEY						
GRANTEE: LAMB CHRISTOPHER A						
0152/0218	1/01/1973	WD	Q	V		11,000
GRANTOR:						
GRANTEE:						

BUILDING NOTES

BUILDING DIMENSIONS

FSP=[YR=1993] W18 BAS=[YR=1993] W19 FEP=[YR=2006] W18 S11 E18 N11$ S11 W18 S19 FOP=[YR=1993] S14 E55 N14 W7 S7 W42 N7 W6$ E6 S7 E42 N7 E7 N19 W18 N11$ S11 E18 N11$ PTR= E20 FUS=[YR=1993] E12 S11 E18 N11 E12 S20 W7 S4 W4 S4 W4 N4 W8 N10 W3 S14 W4 N5 W12 N23$ W20$.

EXTRA FEATURES

L N	OB/XF CODE	DESCRIPTION	BLD	CAP	L	W	UNITS	UT	Adj R	ADJ UNIT PRICE	ORIG COND	YEAR ON	YEAR ACTUAL	Q	% COND	OB/XF MKT VALUE	NOTES
1	0510	GARAGE WD-	0	100	16	32	512.00	SF	35.00	35.00	100	1989	1989	3	20	3,584	
3	0500	FP-PRE FAB	0	100	0	0	1.00	UT	3,500.00	3,500.00	100	1990	1990	3	70	2,450	

LAND DESCRIPTION

TOTAL OB/XF 6,034

L N	USE CODE	CLS	LAND USE DESCRIPTION	CAP	R D	LOC ZONE	FRONT	DEPTH	TOT LND UTS	UNIT TYPE	D T	DPTH FACT	% COND	TOT ADJ	UNIT PRICE	ADJ UNIT PRICE	LAND VALUE	OTHER ADJUSTMENTS AND NOTES	YEAR	DENSITY	DECL	FRZ	YR	CONSRV
1	000115	C	SFR ACRES	100		OR	0.00	0.00	4.56	AC		1.00	1.00	1.00	18,000.00	18,000.00	82,080							

REVIEW DATE 06/05/2020 BY KBA Total Acres: 4.56 Total Land Value: 82,080 Market: 0 Agricultural: 0 Common: 82,080 PRINTED 08/02/2023 BY SYS

LOT 4
WOODLAND ESTATES UNIT 1
PB 4/29 & 30

LAMB CHRISTOPHER A & SARA
43055 HILLTOP LANE
CALLAHAN, FL 32011

2023

16-1N-25-2910-0004-0000

BUILDING CHARACTERISTICS

ELEMENT	CD	CONSTRUCTION
Exterior Wall	05	AVERAGE 100
Roof Structur	07	GAMBREL 100
Roof Cover	03	COMP SHNGL 100
Interior Wall	05	DRYWALL 100
Interior Floo	03	CONC FINSH 100
Air Condition	03	CENTRAL 100
Heating Type	04	AIR DUCTED 100
Bedrooms		0 100
Bathrooms		0.5 100
Frame	02	WOOD FRAME 100
Stories	1.5	1.5 100
Units		0 100
Occupancy	00	NONE 100
Quality	04	Quality Level 04

DOR CODE	0100	SINGLE FAMILY	
MAP NUM		MKT AREA	08
NEIGHBORHOOD/LOC	8005.00		

AREA TYPE	TOTAL GROSS AREA	PCT OF BASE	TOT ADJ AREA	SUBAREA MARKET VALUE
BAS	880	100	880	15,770
BAS	128	100	128	2,294
STR	64	10	6	108
UST	520	45	234	4,194
TOTALS	1,592		1,248	22,364

MARKET ADJUSTMENTS

TYPE	MDL	EFF. AREA	TOT ADJ PTS	EFF. BASE RATE	REPL. COST NEW	AYB	EYB	ECON	FNCT		NORM	% COND
6500	01	1,248	102.3960	35.84	44,728	1986	1991	0	0	0	50.00	50.00

2 GARAGE RES – 100% - 2020 Heated Area: 1008 HX Base Yr 2020

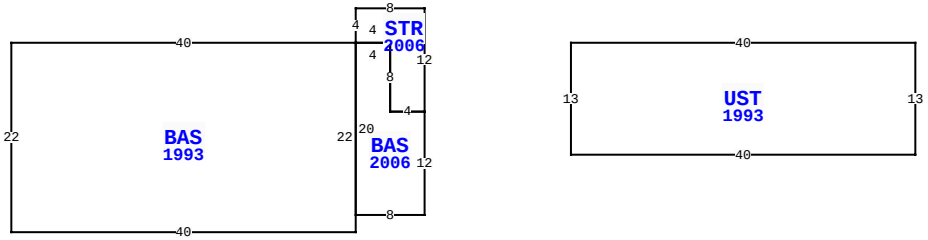

43055 HILLTOP LN, CALLAHAN

BLD DATE		LGL DATE	
XF DATE		LAND DATE	
INC DATE		AG DATE	

NASSAU COUNTY PROPERTY

PAGE 2 of 2 6

VALUATION SUMMARY

VALUATION BY		STANDARD
Tax Group: 6	Tax Dist:	
BUILDING MARKET VALUE		255,306
TOTAL MARKET OB/XF VALUE		6,034
TOTAL LAND VALUE - MARKET		82,080
TOTAL MARKET VALUE		343,420
SOH/AGL Deduction		103,422
ASSESSED VALUE		239,998
TOTAL EXEMPTION VALUE	HX HB	50,000
BASE TAXABLE VALUE		189,998
TOTAL JUST VALUE		343,420
NCON VALUE		0
INCOME VALUE		
PREVIOUS YEAR MKT VALUE		301,355

PERMIT NUM	DESCRIPTION	AMT	ISSUED

SALES DATA

OFF RECORD Number	DATE	TYPE INST	Q / U	V / I	RSN CD	SALE PRICE
2298/1050	8/09/2019	WD	Q	I	01	315,000
GRANTOR: KARST SHIRLEY						
GRANTEE: LAMB CHRISTOPHER A						
0152/0218	1/01/1973	WD	Q	V		11,000
GRANTOR:						
GRANTEE:						

BUILDING NOTES

BUILDING DIMENSIONS

BAS=[YR=1993] W40 S22 E40 N22$ BAS=[YR=2006] S20 E8 N12
STR=[YR=2006] N12 W8 S4 E4 S8 E4$ W4 N8 W4$ PTR= E25
UST=[YR=1993] E40 S13 W40 N13$ W25$.

EXTRA FEATURES

L N	OB/XF CODE	DESCRIPTION	BLD	CAP	L	W	UNITS	UT	Adj R	ADJ UNIT PRICE	ORIG COND	YEAR ON	YEAR ACTUAL	Q	% COND	OB/XF MKT VALUE	NOTES

LAND DESCRIPTION

TOTAL OB/XF 0

L N	USE CODE	CLS	LAND USE DESCRIPTION	CAP	R D	LOC ZONE	FRONT	DEPTH	TOT LND UTS	UNIT TYPE	D T	DPTH FACT	% COND	TOT ADJ	UNIT PRICE	ADJ UNIT PRICE	LAND VALUE	OTHER ADJUSTMENTS AND NOTES	YEAR	DENSITY	DECL	FRZ	YR	CONSRV

REVIEW DATE 06/05/2020 BY KBA Total Acres: 4.56 Total Land Value: 82,080 Market: 0 Agricultural: 0 Common: 82,080 PRINTED 08/02/2023 BY SYS