LOT 30
IN OR 2397/924
RATLIFF ACRES UNR

HAND VERNON D & HATTIE D L/E/
43390 RATLIFF ROAD
CALLAHAN, FL 32011

2023

16-1N-25-2900-0030-0000

NASSAU COUNTY PROPERTY

BUILDING CHARACTERISTICS

ELEMENT	CD	CONSTRUCTION
Exterior Wall	20	FACE BRICK 100
Roof Structur	03	GABLE/HIP 100
Roof Cover	03	COMP SHNGL 100
Interior Wall	05	DRYWALL 100
Interior Floo	14	CARPET 80
Interior Floo	08	SHT VINYL 20
Air Condition	03	CENTRAL 100
Heating Type	04	AIR DUCTED 100
Bedrooms		3 100
Bathrooms		2 100
Frame	02	WOOD FRAME 100
Stories	1.	1. 100
Units		0 100
BUD8 Adjustme	06	DIST 1D 100
Occupancy	00	NONE 100
Quality	01	Quality Level 01

DOR CODE 0100 SINGLE FAMILY
MAP NUM | MKT AREA 08
NEIGHBORHOOD/LOC 8005.00

AREA TYPE	TOTAL GROSS AREA	PCT OF BASE	TOT ADJ AREA	SUBAREA MARKET VALUE
BAS	1,616	100	1,616	125,147
FEP	250	80	200	15,488
FGR	598	55	329	25,478
FOP	35	30	10	774
UDG	1,089	55	599	46,388
USP	250	30	75	5,808
TOTALS	3,838		2,829	219,084

MARKET ADJUSTMENTS

TYPE	MDL	EFF. AREA	TOT ADJ PTS	EFF. BASE RATE	REPL. COST NEW	AYB	EYB	ECON	FNCT		NORM	% COND
0900	01	2,829	94.1760	111.83	316,367	1977	1977	0	0	0	30.75	69.25

1 SNGL FAM – 100% - 0 Heated Area: 1616 HX Base Yr

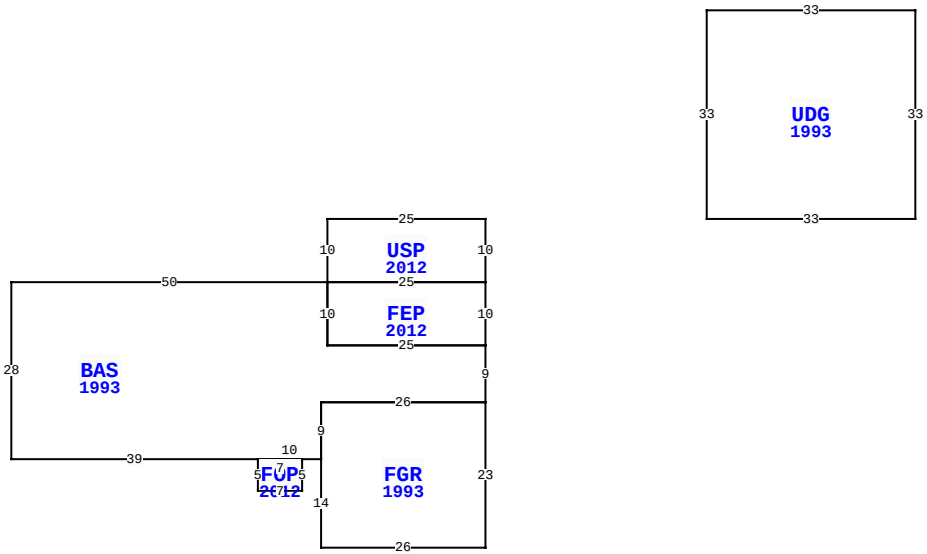

43390 RATLIFF RD, CALLAHAN

BLD DATE		LGL DATE	
XF DATE		LAND DATE	
INC DATE		AG DATE	

VALUATION SUMMARY

VALUATION BY		STANDARD
Tax Group: 6	Tax Dist:	
BUILDING MARKET VALUE		219,084
TOTAL MARKET OB/XF VALUE		1,747
TOTAL LAND VALUE - MARKET		70,920
TOTAL MARKET VALUE		291,751
SOH/AGL Deduction		142,030
ASSESSED VALUE		149,721
TOTAL EXEMPTION VALUE	HX HB	50,000
BASE TAXABLE VALUE		99,721
TOTAL JUST VALUE		291,751
NCON VALUE		0
INCOME VALUE		
PREVIOUS YEAR MKT VALUE		239,257

PERMIT NUM	DESCRIPTION	AMT	ISSUED
1703750	XFOB	14,206	06/01/2017

SALES DATA

OFF RECORD Number	DATE	TYPE INST	Q U	V I	RSN CD	SALE PRICE
2397/0924	10/02/2020	WD	U	I	11	100
GRANTOR: HAND VERNON D & HATTI						
GRANTEE: CARROLL CHARLENE D						
0491/0249	6/01/1986	WD	Q	I		85,500
GRANTOR:						
GRANTEE:						

BUILDING NOTES

BUILDING DIMENSIONS

USP=[YR=2012] W25 S10 BAS=[YR=1993] W50 S28 E39 FOP=[YR=2012] S5 E7 N5 W7$ E10 FGR=[YR=1993] S14 E26 N23 W26 S9 $ N9 E26 N9FEP=[YR=2012] N10 W25 S10E25$ W25 N10$E25 N10$ PTR= E35 UDG=[YR=1993] E33 N33 W33S33$W35 $.

EXTRA FEATURES

LN	OB/XF CODE	DESCRIPTION	BLD	CAP	L	W	UNITS	UT	Adj R	ADJ UNIT PRICE	ORIG COND	YEAR ON	YEAR ACTUAL	Q	% COND	OB/XF MKT VALUE	NOTES
1	0811	CONCRETE B	0	100	0	0	400.00	SF	5.20	5.20	100	1980	1980	3	35	728	
2	0811	CONCRETE B	0	100	0	0	560.00	SF	5.20	5.20	100	1980	1980	3	35	1,019	

LAND DESCRIPTION

TOTAL OB/XF 1,747

LN	USE CODE	CLS	LAND USE DESCRIPTION	CAP	RD	LOC ZONE	FRONT	DEPTH	TOT LND UTS	UNIT TYPE	DT	DPTH FACT	% COND	TOT ADJ	UNIT PRICE	ADJ UNIT PRICE	LAND VALUE	OTHER ADJUSTMENTS AND NOTES	YEAR	DENSITY	DECL	FRZ	YR	CONSRV
1	000115	C	SFR ACRES	100	0006	OR	0.00	0.00	3.94	AC		1.00	1.00	1.00	18,000.00	18,000.00	70,920							

REVIEW DATE 11/01/2017 BY KB Total Acres: 3.94 Total Land Value: 70,920 Market: 0 Agricultural: 0 Common: 70,920 PRINTED 08/02/2023 BY SYS