IN OR 1042/1371

FISHER MICHELE & MATTHEW
54542 HURST ROAD
CALLAHAN, FL 32011

2023

16-1N-25-0000-0014-0000

BUILDING CHARACTERISTICS

ELEMENT	CD	CONSTRUCTION
Exterior Wall	20	FACE BRICK 90
Exterior Wall	05	AVERAGE 10
Roof Structur	03	GABLE/HIP 100
Roof Cover	03	COMP SHNGL 100
Interior Wall	05	DRYWALL 100
Interior Floo	14	CARPET 70
Interior Floo	11	CLAY TILE 30
Air Condition	03	CENTRAL 100
Heating Type	04	AIR DUCTED 100
Bedrooms		3 100
Bathrooms		2 100
Frame	02	WOOD FRAME 100
Stories	1.	1. 100
Units		0 100
BUD8 Adjustme	06	DIST 1D 100
Occupancy	00	NONE 100
Quality	03	Quality Level 03
DOR CODE	0100	SINGLE FAMILY
MAP NUM		MKT AREA 08
NEIGHBORHOOD/LOC	8026.00	

AREA TYPE	TOTAL GROSS AREA	PCT OF BASE	TOT ADJ AREA	SUBAREA MARKET VALUE
BAS	2,581	100	2,581	177,448
BAS	90	100	90	6,188
FOP	80	30	24	1,650
FOP	30	30	9	619
UCP	600	20	120	8,250
TOTALS	3,381		2,824	194,154

MARKET ADJUSTMENTS

TYPE	MDL	EFF. AREA	TOT ADJ PTS	EFF. BASE RATE	REPL. COST NEW	AYB	EYB	ECON	FNCT		NORM	% COND
0100	01	2,824	104.2560	94.09	265,710	1977	1982	0	0	0	26.93	73.07

1 SINGLE FAM – 100% - 2003 Heated Area: 2671 HX Base Yr 2003

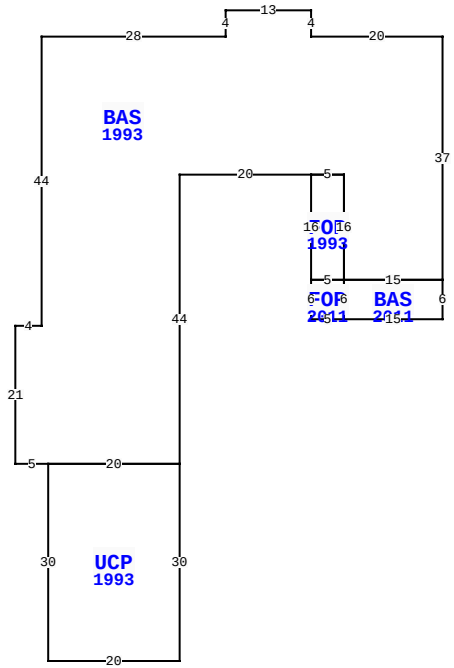

54542 HURST RD, CALLAHAN

BLD DATE		LGL DATE	
XF DATE		LAND DATE	05/19/2023 MLU
INC DATE		AG DATE	

NASSAU COUNTY PROPERTY

PAGE 1 of 1 6

VALUATION SUMMARY

VALUATION BY		STANDARD
Tax Group: 6	Tax Dist:	
BUILDING MARKET VALUE		194,154
TOTAL MARKET OB/XF VALUE		4,199
TOTAL LAND VALUE - MARKET		108,160
TOTAL MARKET VALUE		306,513
SOH/AGL Deduction		142,144
ASSESSED VALUE		164,369
TOTAL EXEMPTION VALUE	HX HB	50,000
BASE TAXABLE VALUE		114,369
TOTAL JUST VALUE		306,513
NCON VALUE		0
INCOME VALUE		
PREVIOUS YEAR MKT VALUE		285,760

PERMIT NUM	DESCRIPTION	AMT	ISSUED
22001029	REPAIR/RRF	18,397	01/19/2022

SALES DATA

OFF RECORD Number	DATE	TYPE INST	Q U /	V I /	RSN CD	SALE PRICE
1042/1371	3/11/2002	WD	Q	I		170,000
GRANTOR: NONNEMACHER MARGARET						
GRANTEE: FISHER MICHELE & MA						
0769/1369	8/29/1996	WD	Q	I		135,000
GRANTOR: ROMERO RENATO J						
GRANTEE: NONNEMACHER & WRIGH						

BUILDING NOTES

BUILDING DIMENSIONS

BAS=[YR=1993] W20 N4 W13 S4 W28 S44 W4 S21 E5 UCP=[YR=1993] S30 E20 N30 W20$ E20 N44 E20 FOP=[YR=1993] S16 FOP=[YR=2011] S6 E5 BAS=[YR=2011] E15 N6 W15 S6$ N6 W5$E5 N16 W5$ E5 S16 E15 N37$.

EXTRA FEATURES

LN	OB/XF CODE	DESCRIPTION	BLD	CAP	L	W	UNITS	UT	Adj R	ADJ UNIT PRICE	ORIG COND	YEAR ON	YEAR ACTUAL	Q	% COND	OB/XF MKT VALUE	NOTES
1	0500	FP-PRE FAB	0	100	0	0	1.00	UT	3,500.00	3,500.00	100	1980	1980	3	49	1,715	
2	0812	CONCRETE C	0	100	0	0	1,106.00	SF	4.00	4.00	100	1980	1980	3	35	1,548	
3	0351	CARPORT MT	0	100	12	39	468.00	SF	10.00	10.00	100	1980	1980	3	20	936	

LAND DESCRIPTION

TOTAL OB/XF 4,199

LN	USE CODE	CLS	LAND USE DESCRIPTION	CAP	RD	LOC ZONE	FRONT	DEPTH	TOT LND UTS	UNIT TYPE	DT	DPTH FACT	% COND	TOT ADJ	UNIT PRICE	ADJ UNIT PRICE	LAND VALUE	OTHER ADJUSTMENTS AND NOTES	YEAR	DENSITY	DECL	FRZ	YR	CONSRV
1	000115	C	SFR ACRES	100		OR	0.00	0.00	6.76	AC		1.00	1.00	1.00	16,000.00	16,000.00	108,160							

REVIEW DATE 06/05/2020 BY KBA Total Acres: 6.76 Total Land Value: 108,160 Market: 0 Agricultural: 0 Common: 108,160 PRINTED 08/02/2023 BY SYS