LOT 55
TUPELO PLANTATION PB 7/206

DAVIS CALVIN GLENN & SHAUNA R
34619 MITIGATION TRL
CALLAHAN, FL 32011

2023

16-1N-24-2090-0055-0000

NASSAU COUNTY PROPERTY

BUILDING CHARACTERISTICS

ELEMENT	CD	CONSTRUCTION
Exterior Wall	31	HARDIE BRD 90
Exterior Wall	20	FACE BRICK 10
Roof Structur	08	IRREGULAR 100
Roof Cover	03	COMP SHNGL 100
Interior Wall	05	DRYWALL 100
Interior Floo	13	LVT/LAMNT 70
Interior Floo	11	CLAY TILE 30
Air Condition	03	CENTRAL 100
Heating Type	04	AIR DUCTED 100
Bedrooms		4 100
Bathrooms		2.5 100
Frame	02	WOOD FRAME 100
Stories	0	0 100
Units		0 100
Occupancy	00	NONE 100
Quality	04	Quality Level 04
DOR CODE	0100	SINGLE FAMILY
MAP NUM		MKT AREA 09
NEIGHBORHOOD/LOC	9013.00	

AREA TYPE	TOTAL GROSS AREA	PCT OF BASE	TOT ADJ AREA	SUBAREA MARKET VALUE
BAS	1,848	100	1,848	240,185
FGR	483	55	266	34,572
FOP	186	30	56	7,278
FOP	398	30	119	15,466
FUS	1,151	100	1,151	149,595
STR	69	10	7	910
TOTALS	4,135		3,447	448,007

MARKET ADJUSTMENTS

TYPE	MDL	EFF. AREA	TOT ADJ PTS	EFF. BASE RATE	REPL. COST NEW	AYB	EYB	ECON	FNCT		NORM	% COND
0900	01	3,447	109.4478	129.97	448,007	2022	2022	0	0	0	0.00	100.00

1 SNGL FAM – 100% - 2023 Heated Area: 2999 HX Base Yr 2023

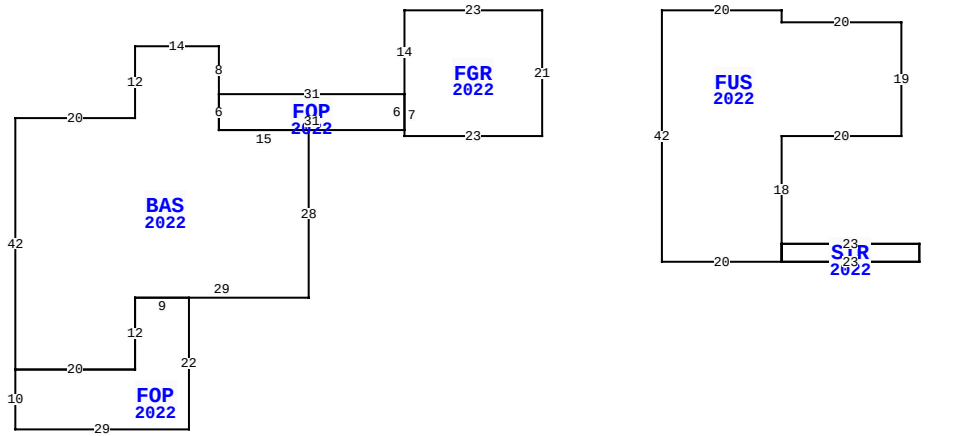

34619 MITIGATION TRL, CALLAHAN

BLD DATE		LGL DATE	
XF DATE		LAND DATE	06/16/2023 MLU
INC DATE		AG DATE	

VALUATION SUMMARY

VALUATION BY		STANDARD
Tax Group: 6	Tax Dist:	
BUILDING MARKET VALUE		448,007
TOTAL MARKET OB/XF VALUE		0
TOTAL LAND VALUE - MARKET		114,740
TOTAL MARKET VALUE		562,747
SOH/AGL Deduction		33,453
ASSESSED VALUE		529,294
TOTAL EXEMPTION VALUE	HX HB	50,000
BASE TAXABLE VALUE		479,294
TOTAL JUST VALUE		562,747
NCON VALUE		448,007
INCOME VALUE		
PREVIOUS YEAR MKT VALUE		71,400

PERMIT NUM	DESCRIPTION	AMT	ISSUED
22000198	CO ISSUED	0	01/05/2022
20006190	NEW CONSTR	385,852	07/16/2020

SALES DATA

OFF RECORD Number	DATE	TYPE INST	Q U	V I	RSN CD	SALE PRICE
2309/0843	9/30/2019	WD	Q	V	01	54,000
GRANTOR: BUTLER DAISY D						
GRANTEE: DAVIS CALVIN GLENN						
1896/0630	12/20/2013	WD	Q	V	01	39,900
GRANTOR: TUPELO PLANTATION LLC						
GRANTEE: BUTLER DAISY D						

BUILDING NOTES

BUILDING DIMENSIONS

FGR=[YR=2022] W23 S14 FOP=[YR=2022] W31 BAS=[YR=2022] N8 W14 S12 W20 S42 FOP=[YR=2022] S10 E29 N22 W9 S12 W20 $ E20 N12 E29 N28 W15 N6$ S6 E31 N6$ S7 E23 N21$ PTR=E20 FUS=[YR=2022] E20 S2 E20 S19 W20 S18 STR=[YR=2022] E23 S3 W23 N3$ S3 E23 N3 W23 S3 W20 N42$ W20$.

EXTRA FEATURES

LN	OB/XF CODE	DESCRIPTION	BLD	CAP	L	W	UNITS	UT	Adj R	ADJ UNIT PRICE	ORIG COND	YEAR ON	YEAR ACTUAL	Q	% COND	OB/XF MKT VALUE	NOTES

LAND DESCRIPTION

TOTAL OB/XF 0

LN	USE CODE	CLS	LAND USE DESCRIPTION	CAP	RD	LOC ZONE	FRONT	DEPTH	TOT LND UTS	UNIT TYPE	DT	DPTH FACT	% COND	TOT ADJ	UNIT PRICE	ADJ UNIT PRICE	LAND VALUE	OTHER ADJUSTMENTS AND NOTES	YEAR	DENSITY	DECL	FRZ	YR	CONSRV
1	000115	C	SFR ACRES	100		PUD	0.00	0.00	5.10	AC		1.00	1.00	1.00	19,000.00	19,000.00	96,900							
2	009605	C	WETLANDS	0		PUD	0.00	0.00	4.46	AC		1.00	1.00	1.00	4,000.00	4,000.00	17,840							

REVIEW DATE 01/04/2022 BY TW Total Acres: 9.56 Total Land Value: 114,740 Market: 0 Agricultural: 0 Common: 114,740 PRINTED 08/02/2023 BY SYS