LOT 51
IN OR 1429/1861
TUPELO PLANTATION PB 7/206

HARTFORD WILLIAM E & JESSIE L
PO BOX 2226
CALLAHAN, FL 32011-2226

2023

16-1N-24-2090-0051-0000

BUILDING CHARACTERISTICS

ELEMENT	CD	CONSTRUCTION
Exterior Wall	10	ABOVE AVG 100
Roof Structur	03	GABLE/HIP 100
Roof Cover	12	MODULAR MT 100
Interior Wall	05	DRYWALL 100
Interior Floo	12	HARDWOOD 70
Interior Floo	14	CARPET 30
Air Condition	03	CENTRAL 100
Heating Type	04	AIR DUCTED 100
Bedrooms		4 100
Bathrooms		3.5 100
Frame	02	WOOD FRAME 100
Stories	0	0 100
Units		0 100
Occupancy	00	NONE 100
Quality	03	Quality Level 03
DOR CODE	0100	SINGLE FAMILY
MAP NUM		MKT AREA 09
NEIGHBORHOOD/LOC	9013.00	

AREA TYPE	TOTAL GROSS AREA	PCT OF BASE	TOT ADJ AREA	SUBAREA MARKET VALUE
BAL	288	15	43	4,777
BAS	2,198	100	2,198	244,185
FOP	85	30	26	2,889
FUS	1,202	100	1,202	133,535
PTO	288	5	14	1,555
UGR	704	45	317	35,217
UUS	704	50	352	39,105
TOTALS	5,469		4,152	461,263

MARKET ADJUSTMENTS

TYPE	MDL	EFF. AREA	TOT ADJ PTS	EFF. BASE RATE	REPL. COST NEW	AYB	EYB	ECON	FNCT		NORM	% COND
0900	01	4,152	99.0000	117.56	488,109	2010	2010	0	0	0	5.50	94.50

1 SNGL FAM – 100% - 2020 Heated Area: 3400 HX Base Yr 2020

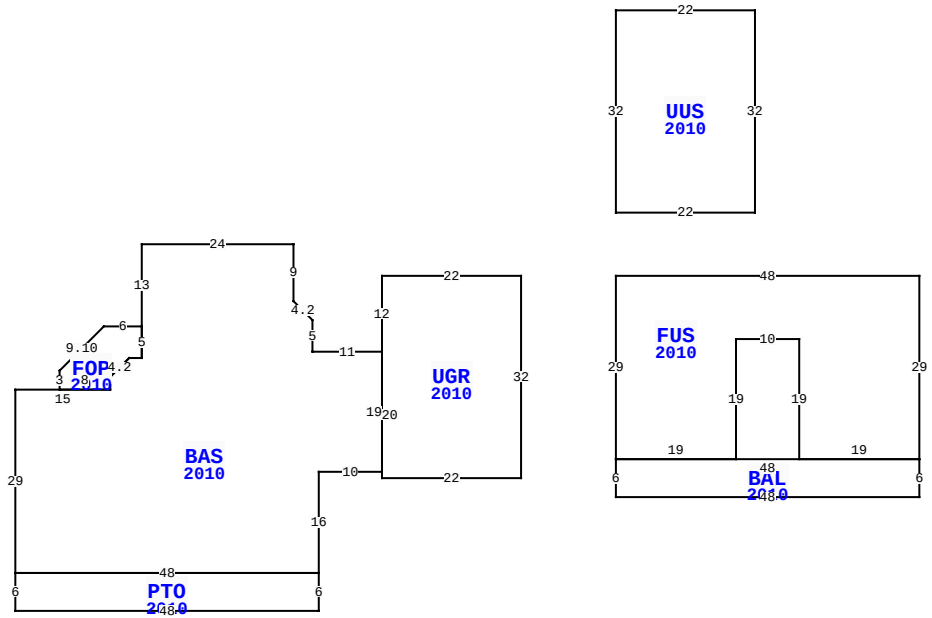

34175 STEEPLE CHASE WAY, CALLAHAN

BLD DATE		LGL DATE	
XF DATE		LAND DATE	06/01/2023 MLU
INC DATE		AG DATE	

NASSAU COUNTY PROPERTY

PAGE 1 of 2 6

VALUATION SUMMARY

VALUATION BY		STANDARD
Tax Group: 6	Tax Dist:	
BUILDING MARKET VALUE		505,419
TOTAL MARKET OB/XF VALUE		10,111
TOTAL LAND VALUE - MARKET		126,400
TOTAL MARKET VALUE		641,930
SOH/AGL Deduction		202,882
ASSESSED VALUE		439,048
TOTAL EXEMPTION VALUE	HX HB	50,000
BASE TAXABLE VALUE		389,048
TOTAL JUST VALUE		641,930
NCON VALUE		0
INCOME VALUE		
PREVIOUS YEAR MKT VALUE		520,597

PERMIT NUM	DESCRIPTION	AMT	ISSUED
20004882	GARAGE	84,222	06/05/2020
C22174	CO ISSUED	0	02/24/2010
R11780	REPAIR/RRF	5,000	03/01/2009
E21515	ELEC OTHER	4,000	12/01/2008
M14304	MECH OTHER	0	12/01/2008
B22174	NEW CONSTR	316,998	12/01/2008

SALES DATA

OFF RECORD Number	DATE	TYPE INST	Q U	V I	RSN CD	SALE PRICE
1429/1861	7/21/2006	WD	Q	V		125,000

GRANTOR: TUPELO PLANTATION DEV

GRANTEE: HARTFORD WILLIAM E

BUILDING NOTES

BUILDING DIMENSIONS

UGR=[YR=2010] W22 S12 BAS=[YR=2010] W11 N5 U3 L3 N9 W24 S13 FOP=[YR=2010] W6 L7 D7 S3E8 N2 U3 R3 E2 N5 $ S5 W2 D3 L3 S2 W15 S29 PTO=[YR=2010] S6 E48 N6 W48$ E48 N16 E10 N19$ S20 E22 N32$ PTR= E15 FUS=[YR=2010] E48 S29 BAL=[YR=2010] S6 W48 N6 E48$ W19 N19 W10 S19 W19 N29$ N10 UUS=[YR=2010] N32 E22 S32 W22$ S10 W15$.

EXTRA FEATURES

LN	OB/XF CODE	DESCRIPTION	BLD	CAP	L	W	UNITS	UT	Adj R	ADJ UNIT PRICE	ORIG COND	YEAR ON	YEAR ACTUAL	Q	% COND	OB/XF MKT VALUE	NOTES
1	0350	CARPORT WD	0	100	24	12	288.00	SF	13.00	13.00	100	2008	2008	3	40	1,498	
2	0855	CONC PAVER	0	100	0	0	870.00	SF	10.00	10.00	100	2020	2020	3	99	8,613	

LAND DESCRIPTION

TOTAL OB/XF 10,111

LN	USE CODE	CLS	LAND USE DESCRIPTION	CAP	RD	LOC ZONE	FRONT	DEPTH	TOT LND UTS	UNIT TYPE	DT	DPTH FACT	% COND	TOT ADJ	UNIT PRICE	ADJ UNIT PRICE	LAND VALUE	OTHER ADJUSTMENTS AND NOTES	YEAR	DENSITY	DECL	FRZ	YR	CONSRV
1	000115	C	SFR ACRES	100		PUD	0.00	0.00	9.00	AC		1.00	1.00	1.00	14,000.00	14,000.00	126,000							
2	009605	C	WETLANDS	0		PUD	0.00	0.00	0.10	AC		1.00	1.00	1.00	4,000.00	4,000.00	400							

REVIEW DATE 06/03/2022 BY TWWW Total Acres: 9.10 Total Land Value: 126,400 Market: 0 Agricultural: 0 Common: 126,400 PRINTED 08/02/2023 BY SYS

LOT 51
IN OR 1429/1861
TUPELO PLANTATION PB 7/206

HARTFORD WILLIAM E & JESSIE L
PO BOX 2226
CALLAHAN, FL 32011-2226

2023

16-1N-24-2090-0051-0000

NASSAU COUNTY PROPERTY

BUILDING CHARACTERISTICS

ELEMENT	CD	CONSTRUCTION
Exterior Wall	25	MOD METAL 100
Roof Structur	03	GABLE/HIP 100
Roof Cover	12	MODULAR MT 100
Interior Wall		N/A 100
Interior Floo	01	NONE 100
Air Condition	99	N/A 100
Heating Type		N/A 100
Bedrooms		0 100
Bathrooms		0 100
Frame	02	WOOD FRAME 100
Stories	0	0 100
Units		0 100
Occupancy	00	NONE 100
Quality	06	Quality Level 06

DOR CODE	0100	SINGLE FAMILY	
MAP NUM		MKT AREA	09
NEIGHBORHOOD/LOC	9013.00		

AREA TYPE	TOTAL GROSS AREA	PCT OF BASE	TOT ADJ AREA	SUBAREA MARKET VALUE
BAS	3,456	100	3,456	44,156
TOTALS	3,456		3,456	44,156

MARKET ADJUSTMENTS

TYPE	MDL	EFF. AREA	TOT ADJ PTS	EFF. BASE RATE	REPL. COST NEW	AYB	EYB	ECON	FNCT	PD	NORM	% COND
8600	01	3,456	45.4940	10.92	37,740	2020	2020	0	0	117	3.00	117.00

2 BARNS – 0% - 2020 Heated Area: 3456 HX Base Yr 2020

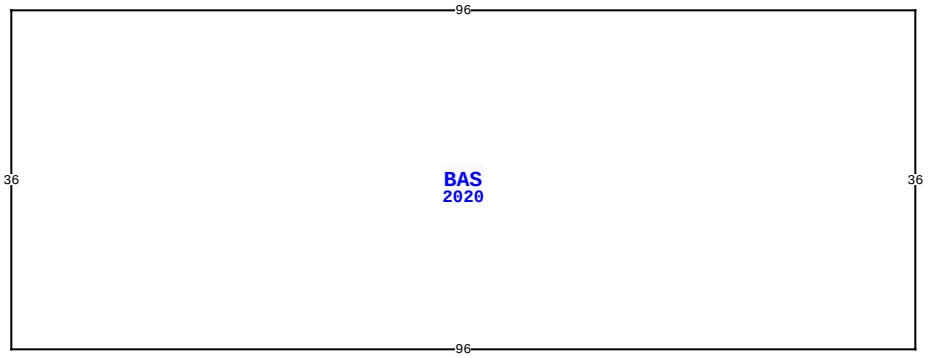

34175 STEEPLE CHASE WAY, CALLAHAN

BLD DATE		LGL DATE	
XF DATE		LAND DATE	06/01/2023 MLU
INC DATE		AG DATE	

VALUATION SUMMARY

VALUATION BY		STANDARD
Tax Group: 6	Tax Dist:	
BUILDING MARKET VALUE		505,419
TOTAL MARKET OB/XF VALUE		10,111
TOTAL LAND VALUE - MARKET		126,400
TOTAL MARKET VALUE		641,930
SOH/AGL Deduction		202,882
ASSESSED VALUE		439,048
TOTAL EXEMPTION VALUE	HX HB	50,000
BASE TAXABLE VALUE		389,048
TOTAL JUST VALUE		641,930
NCON VALUE		0
INCOME VALUE		
PREVIOUS YEAR MKT VALUE		520,597

PERMIT NUM	DESCRIPTION	AMT	ISSUED
P13612	OTHER	0	12/01/2008
M13451	MECH OTHER	0	11/01/2007
E18870	ELEC OTHER	4,000	03/01/2007
R10147	REPAIR/RRF	5,000	03/01/2007
B19559	NEW CONSTR	279,180	03/01/2007
P12184	OTHER	0	03/01/2007

SALES DATA

OFF RECORD Number	DATE	TYPE INST	Q U /	V I /	RSN CD	SALE PRICE
1429/1861	7/21/2006	WD	Q	V		125,000

GRANTOR: TUPELO PLANTATION DEV
GRANTEE: HARTFORD WILLIAM E

BUILDING NOTES

BUILDING DIMENSIONS

BAS=[YR=2020] W96 S36 E96 N36$.

EXTRA FEATURES

L N	OB/XF CODE	DESCRIPTION	BLD	CAP	L	W	UNITS	UT	Adj R	ADJ UNIT PRICE	ORIG COND	YEAR ON	YEAR ACTUAL	Q	% COND	OB/XF MKT VALUE	NOTES

LAND DESCRIPTION

TOTAL OB/XF 0

L N	USE CODE	CLS	LAND USE DESCRIPTION	CAP	R D	LOC ZONE	FRONT	DEPTH	TOT LND UTS	UNIT TYPE	D T	DPTH FACT	% COND	TOT ADJ	UNIT PRICE	ADJ UNIT PRICE	LAND VALUE	OTHER ADJUSTMENTS AND NOTES	YEAR	DENSITY	DECL	FRZ	YR	CONSRV

REVIEW DATE 06/03/2022 BY TWWW Total Acres: 9.10 Total Land Value: 126,400 Market: 0 Agricultural: 0 Common: 126,400 PRINTED 08/02/2023 BY SYS