LOT 40
TUPELO PLANTATION PB 7/206

LOVE ASHLEY
34941 STEEPLE CHASE WAY
CALLAHAN, FL 32011

2023

16-1N-24-2090-0040-0000

BUILDING CHARACTERISTICS

ELEMENT	CD	CONSTRUCTION
Exterior Wall	20	FACE BRICK 100
Roof Structur	08	IRREGULAR 100
Roof Cover	03	COMP SHNGL 100
Interior Wall	05	DRYWALL 100
Interior Floo	13	LVT/LAMNT 70
Interior Floo	11	CLAY TILE 30
Air Condition	03	CENTRAL 100
Heating Type	04	AIR DUCTED 100
Bedrooms		4 100
Bathrooms		2 100
Frame	02	WOOD FRAME 100
Stories	0	0 100
Units		0 100
Occupancy	00	NONE 100
Quality	03	Quality Level 03
DOR CODE	0100	SINGLE FAMILY
MAP NUM		MKT AREA 09
NEIGHBORHOOD/LOC	9013.00	

AREA TYPE	TOTAL GROSS AREA	PCT OF BASE	TOT ADJ AREA	SUBAREA MARKET VALUE
BAS	2,285	100	2,285	288,804
FGR	495	55	272	34,379
FOP	96	30	29	3,666
FSP	189	40	76	9,606
PTO	72	5	4	505
TOTALS	3,137		2,666	336,959

MARKET ADJUSTMENTS

TYPE	MDL	EFF. AREA	TOT ADJ PTS	EFF. BASE RATE	REPL. COST NEW	AYB	EYB	ECON	FNCT		NORM	% COND
0900	01	2,666	109.7280	130.30	347,380	2018	2018	0	0	0	3.00	97.00

1 SNGL FAM – 100% - 2019 Heated Area: 2285 HX Base Yr 2019

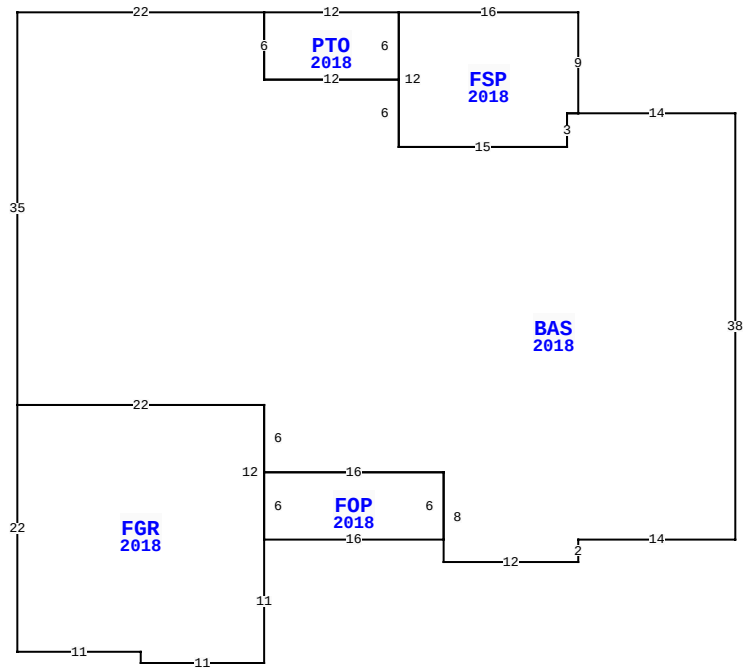

34941 STEEPLE CHASE WAY, CALLAHAN

BLD DATE		LGL DATE	
XF DATE		LAND DATE	06/16/2023 MLU
INC DATE		AG DATE	

NASSAU COUNTY PROPERTY

PAGE 1 of 1 6

VALUATION SUMMARY

VALUATION BY		STANDARD
Tax Group: 6	Tax Dist:	
BUILDING MARKET VALUE		336,959
TOTAL MARKET OB/XF VALUE		3,781
TOTAL LAND VALUE - MARKET		140,800
TOTAL MARKET VALUE		481,540
SOH/AGL Deduction		227,087
ASSESSED VALUE		254,453
TOTAL EXEMPTION VALUE	HX HB	50,000
BASE TAXABLE VALUE		204,453
TOTAL JUST VALUE		481,540
NCON VALUE		0
INCOME VALUE		
PREVIOUS YEAR MKT VALUE		345,861

PERMIT NUM	DESCRIPTION	AMT	ISSUED
17006139	NEW CONSTR	289,125	10/03/2017

SALES DATA

OFF RECORD Number	DATE	TYPE INST	Q U	V I	RSN CD	SALE PRICE
2416/1363	11/12/2020	QC	U	I	11	100
GRANTOR: MCBETH MARTINUS F						
GRANTEE: LOVE ASHLEY L						
2106/1585	3/07/2017	WD	Q	V	01	60,000
GRANTOR: ZERINQUE KALEB & JAMI						
GRANTEE: LOVE ASHLEY & MARTI						

BUILDING NOTES

BUILDING DIMENSIONS

BAS=[YR=2018] W14 FSP=[YR=2018] N9 W16 PTO=[YR=2018] W12 S6 E12 N6$ S12 E15 N3 E1$ W1 S3 W15 N6 W12 N6 W22 S35 FGR=[YR=2018] S22 E11 S1 E11 N11 FOP=[YR=2018] E16 N6 W16 S6$ N12 W22$ E22 S6 E16 S8 E12 N2 E14 N38$.

EXTRA FEATURES

LN	OB/XF CODE	DESCRIPTION	BLD	CAP	L	W	UNITS	UT	Adj R	ADJ UNIT PRICE	ORIG COND	YEAR ON	YEAR ACTUAL	Q	% COND	OB/XF MKT VALUE	NOTES
1	0811	CONCRETE B	0	100	0	0	742.00	SF	5.20	5.20	100	2018	2018	3	98	3,781	

LAND DESCRIPTION

TOTAL OB/XF 3,781

LN	USE CODE	CLS	LAND USE DESCRIPTION	CAP	RD	LOC ZONE	FRONT	DEPTH	TOT LND UTS	UNIT TYPE	DT	DPTH FACT	% COND	TOT ADJ	UNIT PRICE	ADJ UNIT PRICE	LAND VALUE	OTHER ADJUSTMENTS AND NOTES	YEAR	DENSITY	DECL	FRZ	YR	CONSRV
1	000115	C	SFR ACRES	100		PUD	0.00	0.00	8.20	AC		1.00	1.00	1.00	14,000.00	14,000.00	114,800							
2	009605	C	WETLANDS	0		PUD	0.00	0.00	6.50	AC		1.00	1.00	1.00	4,000.00	4,000.00	26,000							

REVIEW DATE 07/10/2018 BY TW Total Acres: 14.70 Total Land Value: 140,800 Market: 0 Agricultural: 0 Common: 140,800 PRINTED 08/02/2023 BY SYS