LOT 14
IN OR 1427/1663
ESMT OR 1532/317

STEVENS VICKIE
33352 HALF HITCH DR
CALLAHAN, FL 32011

2023

16-1N-24-2090-0014-0000

NASSAU COUNTY PROPERTY

BUILDING CHARACTERISTICS

ELEMENT	CD	CONSTRUCTION
Exterior Wall	20	FACE BRICK 100
Roof Structur	08	IRREGULAR 100
Roof Cover	03	COMP SHNGL 100
Interior Wall	05	DRYWALL 100
Interior Floo	11	CLAY TILE 60
Interior Floo	14	CARPET 40
Air Condition	03	CENTRAL 100
Heating Type	04	AIR DUCTED 100
Bedrooms		4 100
Bathrooms		3 100
Frame	02	WOOD FRAME 100
Stories	1.5	1.5 100
Units		0 100
Occupancy	00	NONE 100
Quality	04	Quality Level 04
DOR CODE	5000	IMPROVED AG
MAP NUM		MKT AREA 09
NEIGHBORHOOD/LOC	9013.00	

AREA TYPE	TOTAL GROSS AREA	PCT OF BASE	TOT ADJ AREA	SUBAREA MARKET VALUE
BAS	3,268	100	3,268	374,850
FGR	702	55	386	44,276
FOP	184	30	55	6,309
FOP	447	30	134	15,370
PTO	420	5	21	2,408
UUS	432	50	216	24,776
TOTALS	5,453		4,080	467,989

MARKET ADJUSTMENTS

TYPE	MDL	EFF. AREA	TOT ADJ PTS	EFF. BASE RATE	REPL. COST NEW	AYB	EYB	ECON	FNCT		NORM	% COND
0900	01	4,080	107.9232	128.16	522,893	2008	2008	0	0	0	10.50	89.50

1 SNGL FAM – 100% - 2009 Heated Area: 3268 HX Base Yr 2009

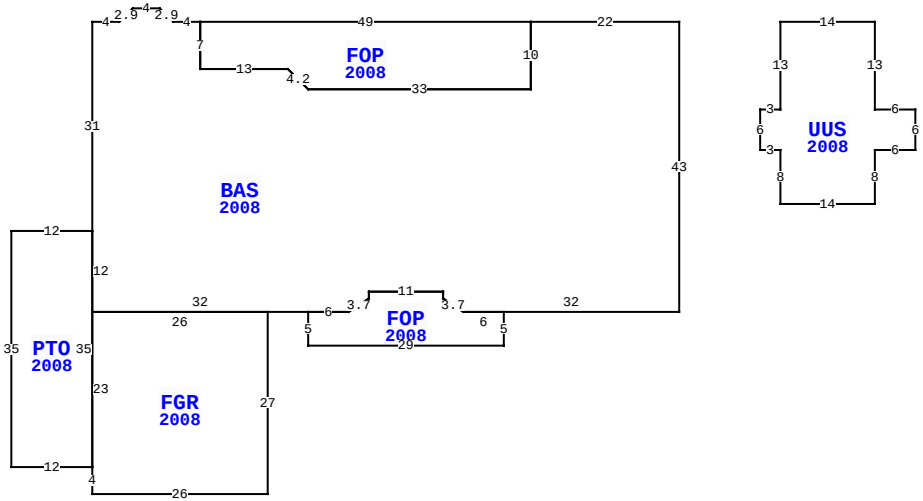

33352 HALF HITCH DR, CALLAHAN

BLD DATE	12/13/2008 JH	LGL DATE	
XF DATE		LAND DATE	06/16/2023 MLU
INC DATE		AG DATE	

VALUATION SUMMARY

VALUATION BY		STANDARD
Tax Group: 6	Tax Dist:	
BUILDING MARKET VALUE		467,989
TOTAL MARKET OB/XF VALUE		12,513
TOTAL LAND VALUE - MARKET		167,700
TOTAL MARKET VALUE		532,543
SOH/AGL Deduction		231,485
ASSESSED VALUE		301,058
TOTAL EXEMPTION VALUE	HX HB WX	55,000
BASE TAXABLE VALUE		246,058
TOTAL JUST VALUE		648,202
NCON VALUE		0
INCOME VALUE		
PREVIOUS YEAR MKT VALUE		379,849

PERMIT NUM	DESCRIPTION	AMT	ISSUED
M13554	MECH OTHER	0	01/01/2008
E20214	ELEC OTHER	2,500	11/01/2007
P12819	OTHER	0	11/01/2007
B20629	NEW CONSTR	350,000	10/01/2007
R10772	REPAIR/RRF	11,000	10/01/2007
B20629	NEW CONSTR	350,000	10/01/2007

SALES DATA

OFF RECORD Number	DATE	TYPE INST	Q / U	V / I	RSN CD	SALE PRICE
1427/1663	7/13/2006	WD	Q	V		99,900

GRANTOR: TUPELO PLANTATION DEV
GRANTEE: STEVENS CHARLES & V

BUILDING NOTES

BUILDING DIMENSIONS

BAS=[YR=2008] W22 FOP=[YR=2008] W49 S7 E13 D3 R3 E33 N10$ S10 W33 U3 L3 W13 N7 W4 U2 L2 W4 D2 L2 W4 S31
PTO=[YR=2008] W12 S35 E12 FGR=[YR=2008] S4 E26 N27 W26 S23$ N35$ S12 E32 FOP=[YR=2008] S5 E29 N5 W6 U2 L3 N1 W11 S1 D2 L3 W6$ E6 U2 R3 N1 E11 S1 D2 R3 E32 N43$ PTR=E15
UUS=[YR=2008] E14 S13 E6 S6 W6 S8 W14 N8 W3 N6 E3 N13$ W15$.

EXTRA FEATURES

LN	OB/XF CODE	DESCRIPTION	BLD	CAP	L	W	UNITS	UT	Adj R	ADJ UNIT PRICE	ORIG COND	YEAR ON	YEAR ACTUAL	Q	% COND	OB/XF MKT VALUE	NOTES
1	0504	FP-ELECTRI	0	100	0	0	1.00	UT	2,000.00	2,000.00	100	2008	2008	3	93	1,860	
2	0500	FP-PRE FAB	0	100	0	0	1.00	UT	3,500.00	3,500.00	100	2008	2008	3	93	3,255	
4	0825	BRICK	0	100	0	0	44.00	SF	12.50	12.50	100	2008	2008	3	97	534	
5	0600	SUMMER KIT	0	100	0	0	1.00	UT	5,000.00	5,000.00	100	2008	2008	3	40	2,000	
6	0812	CONCRETE C	0	100	0	0	1,351.00	SF	4.00	4.00	100	2008	2008	3	90	4,864	

LAND DESCRIPTION

TOTAL OB/XF 12,513

LN	USE CODE	CLS	LAND USE DESCRIPTION	CAP	RD	LOC ZONE	FRONT	DEPTH	TOT LND UTS	UNIT TYPE	DT	DPTH FACT	% COND	TOT ADJ	UNIT PRICE	ADJ UNIT PRICE	LAND VALUE	OTHER ADJUSTMENTS AND NOTES	YEAR	DENSITY	DECL	FRZ	YR	CONSRV
1	005000	C	RURAL HOME	100		PUD	0.00	0.00	2.00	AC		1.00	1.00	1.00	24,000.00	24,000.00	48,000							
2	005400	A	TIMBER 1 SI	0		PUD	0.00	0.00	5.30	AC		1.00	1.00	1.00	720.00	720.00	3,816							
3	005901	A	HARDWOOD SI	0			0.00	0.00	1.00	AC		1.00	1.00	1.00	225.00	225.00	225							
4	009910	M	MKT.VAL.AG	0			0.00	0.00	6.30	AC		1.00	1.00	1.00	19,000.00	19,000.00	119,700							

REVIEW DATE 09/26/2018 BY TWA Total Acres: 8.30 Total Land Value: 52,041 Market: 119,700 Agricultural: 4,041 Common: 48,000 PRINTED 08/02/2023 BY SYS