PT OF NW1/4 OF NW1/4 OF
SEC 15-3N-24E IN OR 2561/842
ESMT IN OR 557/520 & UTIL

EO HILLIARD HOLDINGS LLC &/FLORIDA PR LLC & ET AL
13871 CR 1567
ADA, OK 74820

2023

15-3N-24-0000-0002-0030

NASSAU COUNTY PROPERTY

BUILDING CHARACTERISTICS

ELEMENT	CD	CONSTRUCTION
Exterior Wall	20	FACE BRICK 100
Roof Structur	04	WOOD TRUSS 100
Roof Cover	03	COMP SHNGL 100
Interior Wall	05	DRYWALL 100
Interior Floo	14	CARPET 100
Air Condition	03	CENTRAL 100
Heating Type	04	AIR DUCTED 100
Bedrooms		0 100
Bathrooms		2 100
Frame	02	WOOD FRAME 100
Story Height		0 100
RMS		0 100
Units		1 100
BUD8 Adjustme	04	DIST 01 100
Quality	03	Quality Level 03
DOR CODE	0300	MULTI-FAMILY
MAP NUM		MKT AREA 06
NEIGHBORHOOD/LOC	000	

AREA TYPE	TOTAL GROSS AREA	PCT OF BASE	TOT ADJ AREA	SUBAREA MARKET VALUE
AOF	372	100	372	32,667
BAS	1,336	100	1,336	117,321
FOP	256	30	77	6,762
FOP	256	30	77	6,762
FUS	1,681	100	1,681	147,617
STP	36	10	4	351
TOTALS	3,937		3,547	311,479

MARKET ADJUSTMENTS

TYPE	MDL	EFF. AREA	TOT ADJ PTS	EFF. BASE RATE	REPL. COST NEW	AYB	EYB	ECON	FNCT		NORM	% COND
0301	03	3,547	115.3600	101.52	360,091	1974	2004	0	0	0	13.50	86.50

1 APARTMENT – 0% - 2023 Heated Area: 3389 HX Base Yr

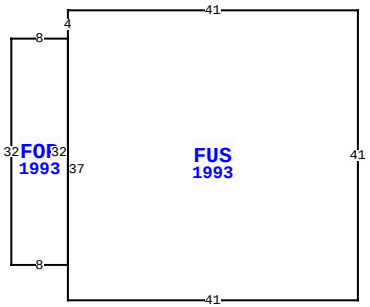

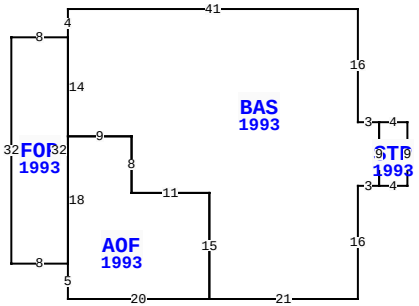

37031 CODY CIR, HILLIARD

BLD DATE	01/13/2021	KK	LGL DATE		
XF DATE	01/13/2021	KK	LAND DATE	01/13/2021	KK
INC DATE			AG DATE		

VALUATION SUMMARY

VALUATION BY	DIRECT_CAP
Tax Group: 3	Tax Dist:
BUILDING MARKET VALUE	0
TOTAL MARKET OB/XF VALUE	0
TOTAL LAND VALUE - MARKET	0
TOTAL MARKET VALUE	11,513,033
SOH/AGL Deduction	0
ASSESSED VALUE	11,513,033
TOTAL EXEMPTION VALUE	0
BASE TAXABLE VALUE	11,513,033
TOTAL JUST VALUE	11,513,033
NCON VALUE	0
INCOME VALUE	11,513,033
PREVIOUS YEAR MKT VALUE	11,516,608

PERMIT NUM	DESCRIPTION	AMT	ISSUED
20120032	ELEC OTHER	0	03/20/2012
20110257	ELEC OTHER	0	12/12/2011
20100080	ELEC OTHER	0	07/12/2010
20100045	ELEC OTHER	600	04/12/2010
E0908083	ELEC OTHER	450	08/06/2009
E0907069	ELEC OTHER	0	07/01/2009

SALES DATA

OFF RECORD Number	DATE	TYPE INST	Q / U	V / I	RSN CD	SALE PRICE
2561/0842	5/06/2022	SW	Q	I	01	13,500,000
GRANTOR: EASTWOOD OAKS LLC						
GRANTEE: EO HILLIARD HOLDING						
2215/0691	7/31/2018	WD	Q	I	01	7,000,000
GRANTOR: EASTWOOD OAKS APARTME						
GRANTEE: EASTWOOD OAKS LLC						

BUILDING NOTES

BUILDING DIMENSIONS

BAS=[YR=1993] W41 S4 FOP=[YR=1993] W8 S32 E8 AOF=[YR=1993] S5 E20 N15 W11 N8 W9 S18$ N32$S14 E9 S8 E11 S15 E21 N16 E3 STP=[YR=1993] E4 N9 W4 S9 $ N9 W3 N16$ PTR=N10 FUS=[YR=1993] N41 W41 S4 FOP=[YR=1993] W8 S32 E8 N32$ S37 E41$ S10 $.

EXTRA FEATURES

LN	OB/XF CODE	DESCRIPTION	BLD	CAP	L	W	UNITS	UT	Adj R	ADJ UNIT PRICE	ORIG COND	YEAR ON	YEAR ACTUAL	Q	% COND	OB/XF MKT VALUE	NOTES
1	0504	FP-ELECTRI	0	0	0	0	1.00	UT	2,000.00	2,000.00	100	1974	1974	3	36	720	
2	0866	POOL FIBER	0	0	0	0	800.00	SF	72.00	72.00	100	1974	1974	3	20	11,520	
3	0803	ASPHALT C	0	0	0	0	102,852.00	SF	2.00	2.00	100	1980	1980	3	50	102,852	
4	0812	CONCRETE C	0	0	0	0	27,755.00	SF	4.00	4.00	100	1974	1974	3	26	28,865	
5	0876	SAUNA BATH	0	0	0	0	1.00	UT	2,000.00	2,000.00	100	1974	1974	3	20	400	
6	0991	TENNIS CRT	0	0	0	0	1.00	UT	18,000.00	18,000.00	100	1974	1974	3	23	4,140	
8	0400	CONC CURB	0	0	0	0	421.00	LF	15.00	15.00	100	1985	1985	3	60	3,789	
9	0972	ST LGHT UN	0	0	0	0	27.00	UT	2,530.00	2,530.00	100	1990	1990	3	29	19,810	
12	0463	FENCE GATE	0	0	0	0	1.00	UT	300.00	300.00	100	2000	2000	3	55	165	
13	0427	CL FNC 10'	0	0	0	0	448.00	LF	13.51	13.51	100	2000	2000	3	55	3,329	

TOTAL OB/XF 175,590

LAND DESCRIPTION

LN	USE CODE	CLS	LAND USE DESCRIPTION	CAP	RD	LOC ZONE	FRONT	DEPTH	TOT LND UTS	UNIT TYPE	DT	DPTH FACT	% COND	TOT ADJ	UNIT PRICE	ADJ UNIT PRICE	LAND VALUE	OTHER ADJUSTMENTS AND NOTES	YEAR	DENSITY	DECL	FRZ	YR	CONSRV
1	000300	C	MULTI-FAM	0	0006	R-3	0.00	0.00	104.00	UT		1.00	1.00	1.00	11,000.00	11,000.00	1,144,000							

REVIEW DATE 01/13/2021 BY KK Total Acres: 0.00 Total Land Value: 0 Market: 0 Agricultural: 0 Common: 0 PRINTED 08/02/2023 BY SYS

PT OF NW1/4 OF NW1/4 OF
SEC 15-3N-24E IN OR 2561/842
ESMT IN OR 557/520 & UTIL

EO HILLIARD HOLDINGS LLC &/FLORIDA PR LLC & ET AL
13871 CR 1567
ADA, OK 74820

2023

15-3N-24-0000-0002-0030

NASSAU COUNTY PROPERTY

BUILDING CHARACTERISTICS

ELEMENT	CD	CONSTRUCTION
Exterior Wall	20	FACE BRICK 100
Roof Structur	04	WOOD TRUSS 100
Roof Cover	03	COMP SHNGL 100
Interior Wall	05	DRYWALL 100
Interior Floo	14	CARPET 100
Air Condition	03	CENTRAL 100
Heating Type	04	AIR DUCTED 100
Bedrooms		1 100
Bathrooms		1 100
Frame	02	WOOD FRAME 100
Story Height		0 100
RMS		0 100
Units		12 100
BUD8 Adjustme	04	DIST 01 100
Quality	03	Quality Level 03

DOR CODE 0300 MULTI-FAMILY
MAP NUM | MKT AREA 06
NEIGHBORHOOD/LOC 000

AREA TYPE	TOTAL GROSS AREA	PCT OF BASE	TOT ADJ AREA	SUBAREA MARKET VALUE
BAS	4,945	100	4,945	413,627
FOP	36	30	11	920
FOP	138	30	41	3,430
FOP	138	30	41	3,430
FOP	144	30	43	3,597
FOP	144	30	43	3,597
FOP	144	30	43	3,597
FOP	144	30	43	3,597
FUS	4,891	100	4,891	409,110
STP	36	10	4	335
TOTALS	10,796		10,109	845,572

MARKET ADJUSTMENTS

TYPE	MDL	EFF. AREA	TOT ADJ PTS	EFF. BASE RATE	REPL. COST NEW	AYB	EYB	ECON	FNCT		NORM	% COND
0301	03	10,109	109.8900	96.70	977,540	1974	2004	0	0	0	13.50	86.50

2 APARTMENT – 0% - 2023 Heated Area: 9836 HX Base Yr

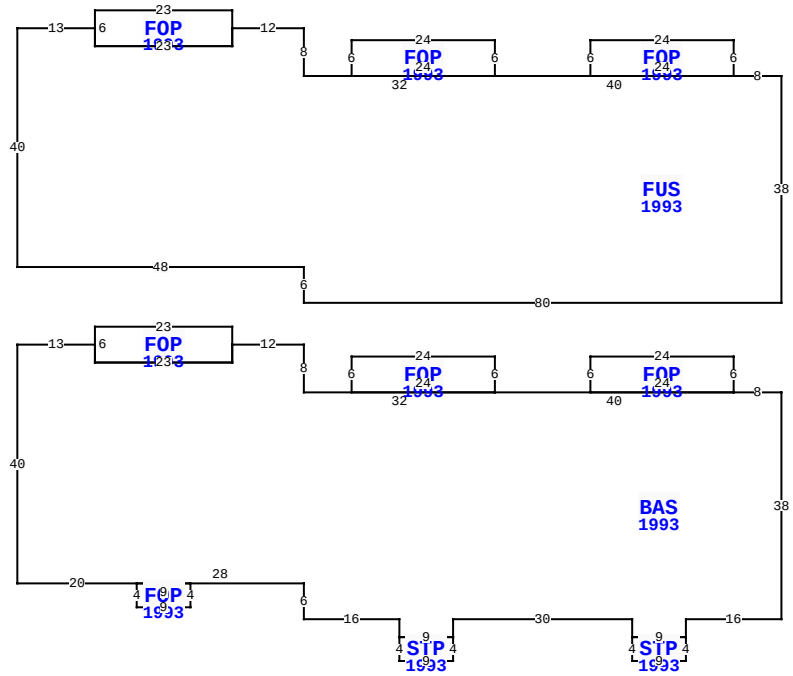

** This building has 11 Sub-Areas

37031 CODY CIR, HILLIARD

BLD DATE	01/13/2021	KK	LGL DATE	
XF DATE	01/13/2021	KK	LAND DATE	01/13/2021 KK
INC DATE			AG DATE	

VALUATION SUMMARY

VALUATION BY	DIRECT_CAP
Tax Group: 3	Tax Dist:
BUILDING MARKET VALUE	0
TOTAL MARKET OB/XF VALUE	0
TOTAL LAND VALUE - MARKET	0
TOTAL MARKET VALUE	11,513,033
SOH/AGL Deduction	0
ASSESSED VALUE	11,513,033
TOTAL EXEMPTION VALUE	0
BASE TAXABLE VALUE	11,513,033
TOTAL JUST VALUE	11,513,033
NCON VALUE	0
INCOME VALUE	11,513,033
PREVIOUS YEAR MKT VALUE	11,516,608

PERMIT NUM	DESCRIPTION	AMT	ISSUED
M0906063	H/AC	0	06/12/2009
B0809118	REPAIR/RRF	0	09/04/2008
B0801005	REPAIR/RRF	0	01/28/2008
B996054	REMODEL	15,000	01/05/1999
5364	REPAIR/RRF	40,000	12/09/1988

SALES DATA

OFF RECORD Number	DATE	TYPE INST	Q / U	V / I	RSN CD	SALE PRICE
2561/0842	5/06/2022	SW	Q	I	01	13,500,000
GRANTOR: EASTWOOD OAKS LLC						
GRANTEE: EO HILLIARD HOLDING						
2215/0691	7/31/2018	WD	Q	I	01	7,000,000
GRANTOR: EASTWOOD OAKS APARTME						
GRANTEE: EASTWOOD OAKS LLC						

BUILDING NOTES

BUILDING DIMENSIONS

BAS=[YR=1993] W8 FOP=[YR=1993] N6 W24 S6 E24$ W40
FOP=[YR=1993] N6 W24 S6 E24 $ W32 N8 W12 FOP=[YR=1993] N3 W23
S6 E23 N3$ S3 W23 N3 W13 S40 E20 FOP=[YR=1993] S4 E9 N4 W9$
E28 S6 E16 S3 STP=[YR=1993] S4 E9 N4 W9$ E9 N3 E30 S3
STP=[YR=1993] S4 E9 N4 W9$ E9 N3 E16 N38$ PTR=N15
FUS=[YR=1993] N38 W8 FOP=[YR=1993] N6 W24 S6 E24$ W40
FOP=[YR=1993] N6 W24 S6 E24$ W32 N8 W12 FOP=[YR=1993] N3 W23
S6 E23 N3$ S3 W23 N3 W13 S40 E48 S6 E80$ S15$.

EXTRA FEATURES

LN	OB/XF CODE	DESCRIPTION	BLD	CAP	L	W	UNITS	UT	Adj R	ADJ UNIT PRICE	ORIG COND	YEAR ON	YEAR ACTUAL	Q	% COND	OB/XF MKT VALUE	NOTES
14	0462	ST/AL FNC	0	0	0	0	1,224.00	SF	10.00	10.00	100	2001	2001	3	30	3,672	
15	0463	FENCE GATE	0	0	0	0	3.00	UT	300.00	300.00	100	2001	2001	3	58	522	

LAND DESCRIPTION

TOTAL OB/XF 4,194

LN	USE CODE	CLS	LAND USE DESCRIPTION	CAP	RD	LOC ZONE	FRONT	DEPTH	TOT LND UTS	UNIT TYPE	DT	DPTH FACT	% COND	TOT ADJ	UNIT PRICE	ADJ UNIT PRICE	LAND VALUE	OTHER ADJUSTMENTS AND NOTES	YEAR	DENSITY	DECL	FRZ	YR	CONSRV

REVIEW DATE 01/13/2021 BY KK Total Acres: 0.00 Total Land Value: 0 Market: 0 Agricultural: 0 Common: 0 PRINTED 08/02/2023 BY SYS

PT OF NW1/4 OF NW1/4 OF
SEC 15-3N-24E IN OR 2561/842
ESMT IN OR 557/520 & UTIL

EO HILLIARD HOLDINGS LLC &/FLORIDA PR LLC & ET AL
13871 CR 1567
ADA, OK 74820

2023

15-3N-24-0000-0002-0030

NASSAU COUNTY PROPERTY

BUILDING CHARACTERISTICS

ELEMENT	CD	CONSTRUCTION
Exterior Wall	20	FACE BRICK 100
Roof Structur	04	WOOD TRUSS 100
Roof Cover	03	COMP SHNGL 100
Interior Wall	05	DRYWALL 100
Interior Floo	14	CARPET 100
Air Condition	03	CENTRAL 100
Heating Type	04	AIR DUCTED 100
Bedrooms		1 100
Bathrooms		1 100
Frame	02	WOOD FRAME 100
Story Height		0 100
RMS		0 100
Units		8 100
BUD8 Adjustme	04	DIST 01 100
Quality	03	Quality Level 03

DOR CODE 0300 MULTI-FAMILY
MAP NUM | MKT AREA 06
NEIGHBORHOOD/LOC 000

AREA TYPE	TOTAL GROSS AREA	PCT OF BASE	TOT ADJ AREA	SUBAREA MARKET VALUE
BAS	3,138	100	3,138	267,800
FOP	144	30	43	3,669
FOP	144	30	43	3,669
FOP	144	30	43	3,669
FOP	144	30	43	3,669
FUS	3,084	100	3,084	263,191
STP	36	10	4	342
STP	36	10	4	342
TOTALS	6,870		6,402	546,352

MARKET ADJUSTMENTS

TYPE	MDL	EFF. AREA	TOT ADJ PTS	EFF. BASE RATE	REPL. COST NEW	AYB	EYB	ECON	FNCT		NORM	% COND
0301	03	6,402	112.1100	98.66	631,621	1974	2004	0	0	0	13.50	86.50

3 APARTMENT – 0% - 2023 Heated Area: 6222 HX Base Yr

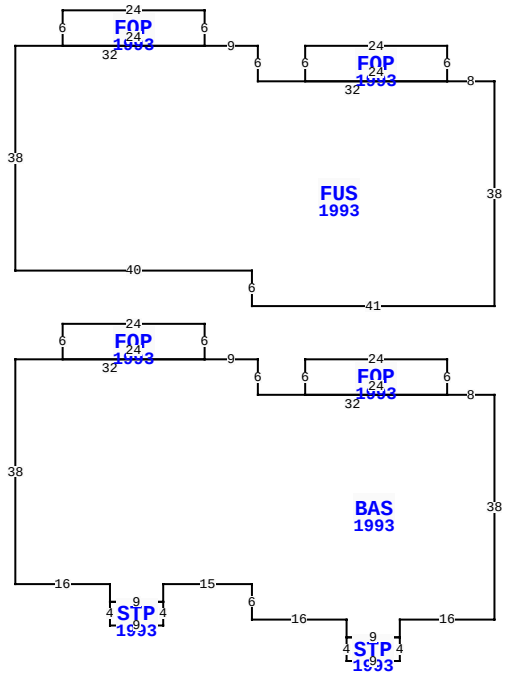

37031 CODY CIR, HILLIARD

BLD DATE	01/13/2021	KK	LGL DATE	
XF DATE	01/13/2021	KK	LAND DATE	01/13/2021 KK
INC DATE			AG DATE	

VALUATION SUMMARY

VALUATION BY	DIRECT_CAP
Tax Group: 3	Tax Dist:
BUILDING MARKET VALUE	0
TOTAL MARKET OB/XF VALUE	0
TOTAL LAND VALUE - MARKET	0
TOTAL MARKET VALUE	11,513,033
SOH/AGL Deduction	0
ASSESSED VALUE	11,513,033
TOTAL EXEMPTION VALUE	0
BASE TAXABLE VALUE	11,513,033
TOTAL JUST VALUE	11,513,033
NCON VALUE	0
INCOME VALUE	11,513,033
PREVIOUS YEAR MKT VALUE	11,516,608

PERMIT NUM	DESCRIPTION	AMT	ISSUED

SALES DATA

OFF RECORD Number	DATE	TYPE INST	Q U	V I	RSN CD	SALE PRICE
2561/0842	5/06/2022	SW	Q	I	01	13,500,000
GRANTOR: EASTWOOD OAKS LLC						
GRANTEE: EO HILLIARD HOLDING						
2215/0691	7/31/2018	WD	Q	I	01	7,000,000
GRANTOR: EASTWOOD OAKS APARTME						
GRANTEE: EASTWOOD OAKS LLC						

BUILDING NOTES

BUILDING DIMENSIONS

BAS=[YR=1993] W8 FOP=[YR=1993] N6 W24 S6 E24$ W32 N6 W9 FOP=[YR=1993] N6 W24 S6 E24$ W32 S38 E16 S3 STP=[YR=1993] S4 E9 N4 W9$ E9N3 E15 S6 E16 S3 STP=[YR=1993] S4 E9 N4 W9$ E9 N3 E16 N38$ PTR=N15 FUS=[YR=1993] N38 W8 FOP=[YR=1993] N6 W24 S6 E24$ W32 N6 W9 FOP=[YR=1993] N6 W24 S6 E24$ W32 S38 E40 S6 E41 $ S15$.

EXTRA FEATURES

LN	OB/XF CODE	DESCRIPTION	BLD	CAP	L	W	UNITS	UT	Adj R	ADJ UNIT PRICE	ORIG COND	YEAR ON	YEAR ACTUAL	Q	% COND	OB/XF MKT VALUE	NOTES

LAND DESCRIPTION

TOTAL OB/XF 0

LN	USE CODE	CLS	LAND USE DESCRIPTION	CAP	RD	LOC ZONE	FRONT	DEPTH	TOT LND UTS	UNIT TYPE	DT	DPTH FACT	% COND	TOT ADJ	UNIT PRICE	ADJ UNIT PRICE	LAND VALUE	OTHER ADJUSTMENTS AND NOTES	YEAR	DENSITY	DECL	FRZ	YR	CONSRV

REVIEW DATE 01/13/2021 BY KK Total Acres: 0.00 Total Land Value: 0 Market: 0 Agricultural: 0 Common: 0 PRINTED 08/02/2023 BY SYS

PT OF NW1/4 OF NW1/4 OF
SEC 15-3N-24E IN OR 2561/842
ESMT IN OR 557/520 & UTIL

EO HILLIARD HOLDINGS LLC &/FLORIDA PR LLC & ET AL
13871 CR 1567
ADA, OK 74820

2023

15-3N-24-0000-0002-0030

NASSAU COUNTY PROPERTY

BUILDING CHARACTERISTICS

ELEMENT	CD	CONSTRUCTION
Exterior Wall	20	FACE BRICK 100
Roof Structur	04	WOOD TRUSS 100
Roof Cover	03	COMP SHNGL 100
Interior Wall	05	DRYWALL 100
Interior Floo	14	CARPET 100
Air Condition	03	CENTRAL 100
Heating Type	04	AIR DUCTED 100
Bedrooms		1 100
Bathrooms		1.5 100
Frame	02	WOOD FRAME 100
Story Height		0 100
RMS		0 100
Units		12 100
BUD8 Adjustme	04	DIST 01 100
Quality	03	Quality Level 03

DOR CODE 0300 MULTI-FAMILY
MAP NUM | MKT AREA 06
NEIGHBORHOOD/LOC 000

AREA TYPE	TOTAL GROSS AREA	PCT OF BASE	TOT ADJ AREA	SUBAREA MARKET VALUE
BAS	5,418	100	5,418	457,268
FOP	36	30	11	928
FOP	144	30	43	3,630
FOP	144	30	43	3,630
FOP	144	30	43	3,630
FOP	144	30	43	3,630
FOP	150	30	45	3,798
FOP	150	30	45	3,798
FUS	5,364	100	5,364	452,711
STP	36	10	4	337
TOTALS	11,766		11,063	933,696

MARKET ADJUSTMENTS

TYPE	MDL	EFF. AREA	TOT ADJ PTS	EFF. BASE RATE	REPL. COST NEW	AYB	EYB	ECON	FNCT		NORM	% COND
0301	03	11,063	110.8800	97.57	1,079,417	1974	2004	0	0	0	13.50	86.50

4 APARTMENT – 0% - 2023 Heated Area: 10782 HX Base Yr

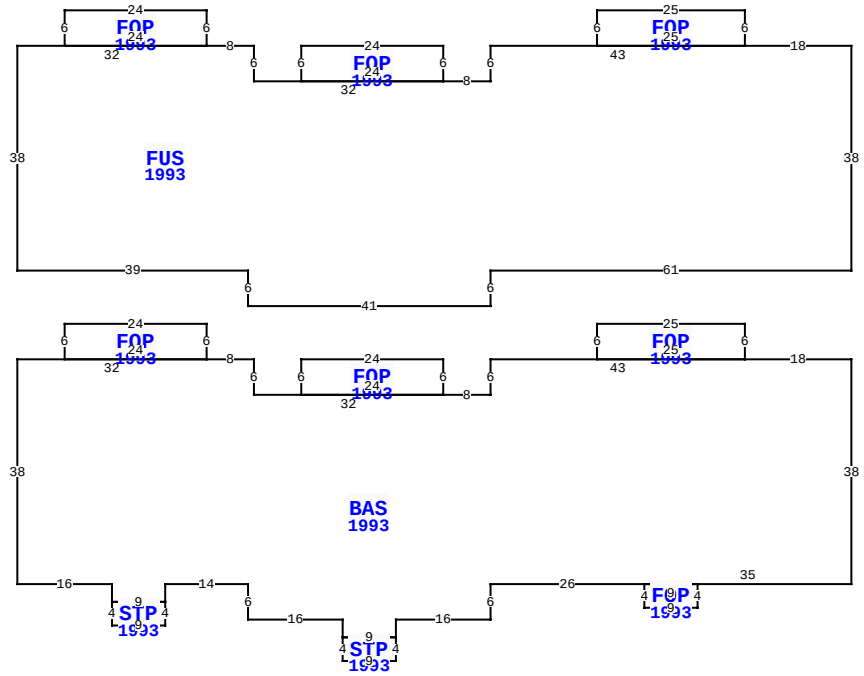

** This building has 11 Sub-Areas

37031 CODY CIR, HILLIARD

BLD DATE	01/13/2021	KK	LGL DATE	
XF DATE	01/13/2021	KK	LAND DATE	01/13/2021 KK
INC DATE			AG DATE	

VALUATION SUMMARY

VALUATION BY	DIRECT_CAP
Tax Group: 3	Tax Dist:
BUILDING MARKET VALUE	0
TOTAL MARKET OB/XF VALUE	0
TOTAL LAND VALUE - MARKET	0
TOTAL MARKET VALUE	11,513,033
SOH/AGL Deduction	0
ASSESSED VALUE	11,513,033
TOTAL EXEMPTION VALUE	0
BASE TAXABLE VALUE	11,513,033
TOTAL JUST VALUE	11,513,033
NCON VALUE	0
INCOME VALUE	11,513,033
PREVIOUS YEAR MKT VALUE	11,516,608

PERMIT NUM	DESCRIPTION	AMT	ISSUED

SALES DATA

OFF RECORD Number	DATE	TYPE INST	Q / U	V / I	RSN CD	SALE PRICE
2561/0842	5/06/2022	SW	Q	I	01	13,500,000
GRANTOR: EASTWOOD OAKS LLC						
GRANTEE: EO HILLIARD HOLDING						
2215/0691	7/31/2018	WD	Q	I	01	7,000,000
GRANTOR: EASTWOOD OAKS APARTME						
GRANTEE: EASTWOOD OAKS LLC						

BUILDING NOTES

BUILDING DIMENSIONS

BAS=[YR=1993] W18 FOP=[YR=1993] N6 W25 S6 E25$ W43S6 W8 FOP=[YR=1993] N6 W24 S6 E24$ W32 N6 W8 FOP=[YR=1993] N6 W24 S6 E24$ W32 S38 E16 S3 STP=[YR=1993] S4 E9 N4 W9$ E9N3 E14 S6 E16 S3 STP=[YR=1993] S4 E9 N4 W9$ E9 N3 E16 N6 E26 FOP=[YR=1993] S4 E9 N4 W9$ E35 N38$ PTR=N15 FUS=[YR=1993] N38 W18 FOP=[YR=1993] N6 W25 S6 E25$ W43S6 W8 FOP=[YR=1993] N6 W24 S6 E24$ W32 N6 W8 FOP=[YR=1993] N6 W24 S6 E24$ W32 S38 E39 S6 E41 N6 E61$ S15$.

EXTRA FEATURES

LN	OB/XF CODE	DESCRIPTION	BLD	CAP	L	W	UNITS	UT	Adj R	ADJ UNIT PRICE	ORIG COND	YEAR ON	YEAR ACTUAL	Q	% COND	OB/XF MKT VALUE	NOTES

LAND DESCRIPTION

TOTAL OB/XF 0

LN	USE CODE	CLS	LAND USE DESCRIPTION	CAP	RD	LOC ZONE	FRONT	DEPTH	TOT LND UTS	UNIT TYPE	DT	DPTH FACT	% COND	TOT ADJ	UNIT PRICE	ADJ UNIT PRICE	LAND VALUE	OTHER ADJUSTMENTS AND NOTES	YEAR	DENSITY	DECL	FRZ	YR	CONSRV

REVIEW DATE 01/13/2021 BY KK Total Acres: 0.00 Total Land Value: 0 Market: 0 Agricultural: 0 Common: 0 PRINTED 08/02/2023 BY SYS

PT OF NW1/4 OF NW1/4 OF
SEC 15-3N-24E IN OR 2561/842
ESMT IN OR 557/520 & UTIL

EO HILLIARD HOLDINGS LLC &/FLORIDA PR LLC & ET AL
13871 CR 1567
ADA, OK 74820

2023

15-3N-24-0000-0002-0030

NASSAU COUNTY PROPERTY

BUILDING CHARACTERISTICS

ELEMENT	CD	CONSTRUCTION
Exterior Wall	20	FACE BRICK 100
Roof Structur	04	WOOD TRUSS 100
Roof Cover	03	COMP SHNGL 100
Interior Wall	05	DRYWALL 100
Interior Floo	14	CARPET 100
Air Condition	03	CENTRAL 100
Heating Type	04	AIR DUCTED 100
Bedrooms		2 100
Bathrooms		2 100
Frame	02	WOOD FRAME 100
Story Height		0 100
RMS		0 100
Units		8 100
BUD8 Adjustme	04	DIST 01 100
Quality	03	Quality Level 03

DOR CODE 0300 MULTI-FAMILY
MAP NUM | MKT AREA 06
NEIGHBORHOOD/LOC 000

AREA TYPE	TOTAL GROSS AREA	PCT OF BASE	TOT ADJ AREA	SUBAREA MARKET VALUE
BAS	4,636	100	4,636	402,298
FOP	150	30	45	3,905
FOP	150	30	45	3,905
FOP	150	30	45	3,905
FOP	150	30	45	3,905
FUS	4,636	100	4,636	402,298
UOP	36	20	7	607
UOP	36	20	7	607
TOTALS	9,944		9,466	821,429

MARKET ADJUSTMENTS

TYPE	MDL	EFF. AREA	TOT ADJ PTS	EFF. BASE RATE	REPL. COST NEW	AYB	EYB	ECON	FNCT		NORM	% COND
0301	03	9,466	114.0000	100.32	949,629	1974	2004	0	0	0	13.50	86.50

5 APARTMENT – 0% - 2023 Heated Area: 9272 HX Base Yr

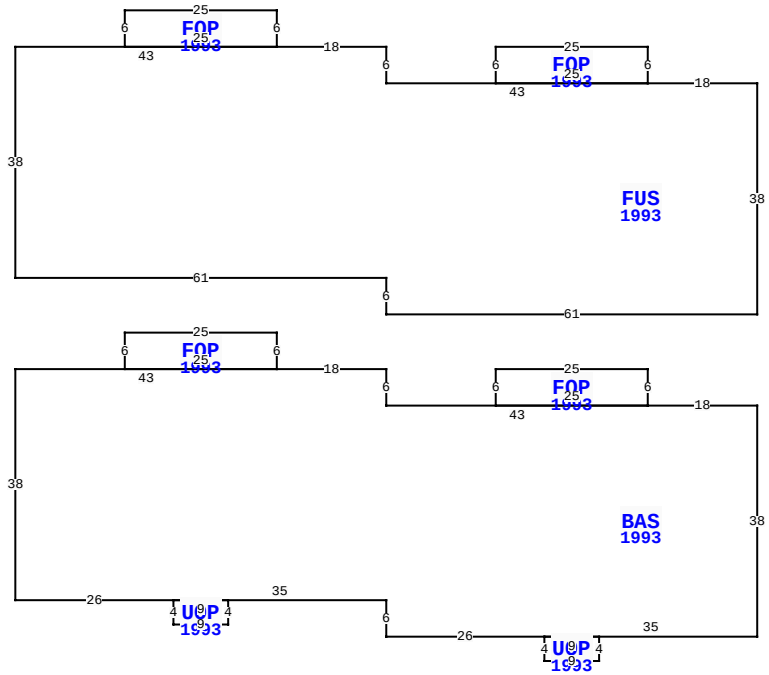

37031 CODY CIR, HILLIARD

BLD DATE	01/13/2021	KK	LGL DATE	
XF DATE	01/13/2021	KK	LAND DATE	01/13/2021 KK
INC DATE			AG DATE	

VALUATION SUMMARY

VALUATION BY	DIRECT_CAP
Tax Group: 3	Tax Dist:
BUILDING MARKET VALUE	0
TOTAL MARKET OB/XF VALUE	0
TOTAL LAND VALUE - MARKET	0
TOTAL MARKET VALUE	11,513,033
SOH/AGL Deduction	0
ASSESSED VALUE	11,513,033
TOTAL EXEMPTION VALUE	0
BASE TAXABLE VALUE	11,513,033
TOTAL JUST VALUE	11,513,033
NCON VALUE	0
INCOME VALUE	11,513,033
PREVIOUS YEAR MKT VALUE	11,516,608

PERMIT NUM	DESCRIPTION	AMT	ISSUED

SALES DATA

OFF RECORD Number	DATE	TYPE INST	Q U	V I	RSN CD	SALE PRICE
2561/0842	5/06/2022	SW	Q	I	01	13,500,000
GRANTOR: EASTWOOD OAKS LLC						
GRANTEE: EO HILLIARD HOLDING						
2215/0691	7/31/2018	WD	Q	I	01	7,000,000
GRANTOR: EASTWOOD OAKS APARTME						
GRANTEE: EASTWOOD OAKS LLC						

BUILDING NOTES

BUILDING DIMENSIONS

BAS=[YR=1993] W18 FOP=[YR=1993] N6 W25 S6 E25$ W43N6 W18 FOP=[YR=1993] N6 W25 S6 E25$ W43 S38 E26 UOP=[YR=1993] S4 E9 N4 W9$ E35 S6 E26 UOP=[YR=1993] S4 E9 N4 W9$ E35 N38$ PTR=N15 FUS=[YR=1993] N38 W18 FOP=[YR=1993] N6 W25 S6 E25$ W43 N6 W18 FOP=[YR=1993] N6 W25 S6 E25$ W43 S38 E61 S6 E61 $ S15$.

EXTRA FEATURES

LN	OB/XF CODE	DESCRIPTION	BLD	CAP	L	W	UNITS	UT	Adj R	ADJ UNIT PRICE	ORIG COND	YEAR ON	YEAR ACTUAL	Q	% COND	OB/XF MKT VALUE	NOTES

LAND DESCRIPTION

TOTAL OB/XF 0

LN	USE CODE	CLS	LAND USE DESCRIPTION	CAP	RD	LOC ZONE	FRONT	DEPTH	TOT LND UTS	UNIT TYPE	DT	DPTH FACT	% COND	TOT ADJ	UNIT PRICE	ADJ UNIT PRICE	LAND VALUE	OTHER ADJUSTMENTS AND NOTES	YEAR	DENSITY	DECL	FRZ	YR	CONSRV

REVIEW DATE 01/13/2021 BY KK Total Acres: 0.00 Total Land Value: 0 Market: 0 Agricultural: 0 Common: 0 PRINTED 08/02/2023 BY SYS

PT OF NW1/4 OF NW1/4 OF
SEC 15-3N-24E IN OR 2561/842
ESMT IN OR 557/520 & UTIL

EO HILLIARD HOLDINGS LLC &/FLORIDA PR LLC & ET AL
13871 CR 1567
ADA, OK 74820

2023

15-3N-24-0000-0002-0030

NASSAU COUNTY PROPERTY

BUILDING CHARACTERISTICS

ELEMENT	CD	CONSTRUCTION
Exterior Wall	20	FACE BRICK 100
Roof Structur	04	WOOD TRUSS 100
Roof Cover	03	COMP SHNGL 100
Interior Wall	05	DRYWALL 100
Interior Floo	14	CARPET 100
Air Condition	03	CENTRAL 100
Heating Type	04	AIR DUCTED 100
Bedrooms		3 100
Bathrooms		2 100
Frame	02	WOOD FRAME 100
Story Height		0 100
RMS		0 100
Units		4 100
BUD8 Adjustme	04	DIST 01 100
Quality	03	Quality Level 03

DOR CODE 0300 MULTI-FAMILY
MAP NUM | MKT AREA 06
NEIGHBORHOOD/LOC 000

AREA TYPE	TOTAL GROSS AREA	PCT OF BASE	TOT ADJ AREA	SUBAREA MARKET VALUE
BAS	2,768	100	2,768	247,142
FOP	150	30	45	4,018
FOP	150	30	45	4,018
FOP	280	30	84	7,500
FUS	2,748	100	2,748	245,356
TOTALS	6,096		5,690	508,034

MARKET ADJUSTMENTS

TYPE	MDL	EFF. AREA	TOT ADJ PTS	EFF. BASE RATE	REPL. COST NEW	AYB	EYB	ECON	FNCT		NORM	% COND
0301	03	5,690	117.3000	103.22	587,322	1974	2004	0	0	0	13.50	86.50

6 APARTMENT – 0% - 2023 Heated Area: 5516 HX Base Yr

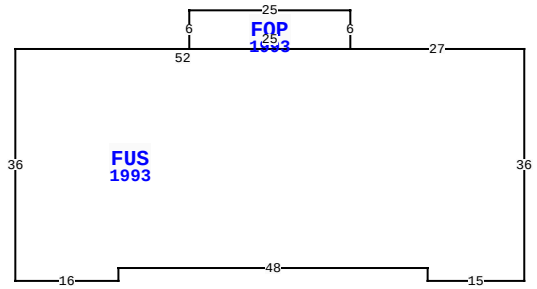

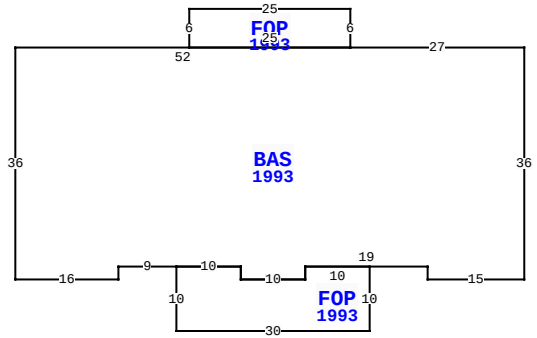

37031 CODY CIR, HILLIARD

BLD DATE	01/13/2021	KK	LGL DATE	
XF DATE	01/13/2021	KK	LAND DATE	01/13/2021 KK
INC DATE			AG DATE	

VALUATION SUMMARY

VALUATION BY	DIRECT_CAP
Tax Group: 3	Tax Dist:
BUILDING MARKET VALUE	0
TOTAL MARKET OB/XF VALUE	0
TOTAL LAND VALUE - MARKET	0
TOTAL MARKET VALUE	11,513,033
SOH/AGL Deduction	0
ASSESSED VALUE	11,513,033
TOTAL EXEMPTION VALUE	0
BASE TAXABLE VALUE	11,513,033
TOTAL JUST VALUE	11,513,033
NCON VALUE	0
INCOME VALUE	11,513,033
PREVIOUS YEAR MKT VALUE	11,516,608

PERMIT NUM	DESCRIPTION	AMT	ISSUED

SALES DATA

OFF RECORD Number	DATE	TYPE INST	Q U	V I	RSN CD	SALE PRICE
2561/0842	5/06/2022	SW	Q	I	01	13,500,000
GRANTOR: EASTWOOD OAKS LLC						
GRANTEE: EO HILLIARD HOLDING						
2215/0691	7/31/2018	WD	Q	I	01	7,000,000
GRANTOR: EASTWOOD OAKS APARTME						
GRANTEE: EASTWOOD OAKS LLC						

BUILDING NOTES

BUILDING DIMENSIONS

BAS=[YR=1993] W27 FOP=[YR=1993] N6 W25 S6 E25$ W52S36 E16 N2 E9 FOP=[YR=1993] S10 E30 N10 W10 S2 W10 N2 W10$ E10 S2 E10 N2 E19 S2 E15 N36$ PTR=N15 FUS=[YR=1993] N36 W27 FOP=[YR=1993] N6 W25 S6 E25$W52 S36 E16 N2 E48 S2 E15$ S15$.

EXTRA FEATURES

LN	OB/XF CODE	DESCRIPTION	BLD	CAP	L	W	UNITS	UT	Adj R	ADJ UNIT PRICE	ORIG COND	YEAR ON	YEAR ACTUAL	Q	% COND	OB/XF MKT VALUE	NOTES

LAND DESCRIPTION

TOTAL OB/XF 0

LN	USE CODE	CLS	LAND USE DESCRIPTION	CAP	RD	LOC ZONE	FRONT	DEPTH	TOT LND UTS	UNIT TYPE	DT	DPTH FACT	% COND	TOT ADJ	UNIT PRICE	ADJ UNIT PRICE	LAND VALUE	OTHER ADJUSTMENTS AND NOTES	YEAR	DENSITY	DECL	FRZ	YR	CONSRV

REVIEW DATE 01/13/2021 BY KK Total Acres: 0.00 Total Land Value: 0 Market: 0 Agricultural: 0 Common: 0 PRINTED 08/02/2023 BY SYS

PT OF NW1/4 OF NW1/4 OF
SEC 15-3N-24E IN OR 2561/842
ESMT IN OR 557/520 & UTIL

EO HILLIARD HOLDINGS LLC &/FLORIDA PR LLC & ET AL
13871 CR 1567
ADA, OK 74820

2023

15-3N-24-0000-0002-0030

BUILDING CHARACTERISTICS

ELEMENT	CD	CONSTRUCTION
Exterior Wall	20	FACE BRICK 100
Roof Structur	04	WOOD TRUSS 100
Roof Cover	03	COMP SHNGL 100
Interior Wall	05	DRYWALL 100
Interior Floo	14	CARPET 100
Air Condition	03	CENTRAL 100
Heating Type	04	AIR DUCTED 100
Bedrooms		2 100
Bathrooms		2 100
Frame	02	WOOD FRAME 100
Story Height		0 100
RMS		0 100
Units		4 100
BUD8 Adjustme	04	DIST 01 100
Quality	03	Quality Level 03

DOR CODE 0300 MULTI-FAMILY
MAP NUM | MKT AREA 06
NEIGHBORHOOD/LOC 000

AREA TYPE	TOTAL GROSS AREA	PCT OF BASE	TOT ADJ AREA	SUBAREA MARKET VALUE
BAS	2,280	100	2,280	201,815
FOP	144	30	43	3,806
FOP	144	30	43	3,806
FUS	2,280	100	2,280	201,815
UOP	36	20	7	619
TOTALS	4,884		4,653	411,862

MARKET ADJUSTMENTS

TYPE	MDL	EFF. AREA	TOT ADJ PTS	EFF. BASE RATE	REPL. COST NEW	AYB	EYB	ECON	FNCT		NORM	% COND
0301	03	4,653	116.2800	102.33	476,141	1974	2004	0	0	0	13.50	86.50

7 APARTMENT – 0% - 2023 Heated Area: 4560 HX Base Yr

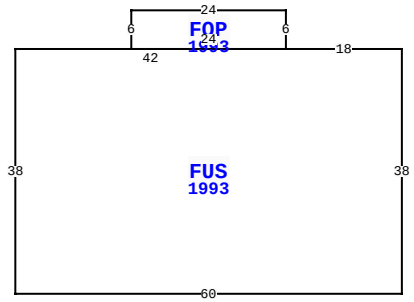

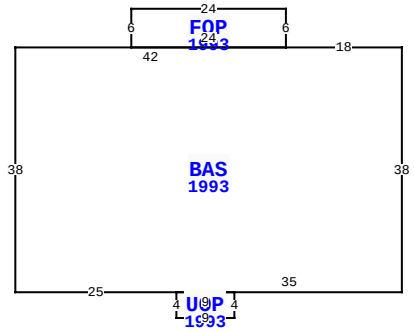

37031 CODY CIR, HILLIARD

BLD DATE	01/13/2021	KK	LGL DATE	
XF DATE	01/13/2021	KK	LAND DATE	01/13/2021 KK
INC DATE			AG DATE	

NASSAU COUNTY PROPERTY

PAGE 7 of 15 3

VALUATION SUMMARY

VALUATION BY	DIRECT_CAP
Tax Group: 3	Tax Dist:
BUILDING MARKET VALUE	0
TOTAL MARKET OB/XF VALUE	0
TOTAL LAND VALUE - MARKET	0
TOTAL MARKET VALUE	11,513,033
SOH/AGL Deduction	0
ASSESSED VALUE	11,513,033
TOTAL EXEMPTION VALUE	0
BASE TAXABLE VALUE	11,513,033
TOTAL JUST VALUE	11,513,033
NCON VALUE	0
INCOME VALUE	11,513,033
PREVIOUS YEAR MKT VALUE	11,516,608

PERMIT NUM	DESCRIPTION	AMT	ISSUED

SALES DATA

OFF RECORD Number	DATE	TYPE INST	Q U	V I	RSN CD	SALE PRICE
2561/0842	5/06/2022	SW	Q	I	01	13,500,000
GRANTOR: EASTWOOD OAKS LLC						
GRANTEE: EO HILLIARD HOLDING						
2215/0691	7/31/2018	WD	Q	I	01	7,000,000
GRANTOR: EASTWOOD OAKS APARTME						
GRANTEE: EASTWOOD OAKS LLC						

BUILDING NOTES

BUILDING DIMENSIONS

BAS=[YR=1993] W18 FOP=[YR=1993] N6 W24 S6 E24$ W42S38 E25
UOP=[YR=1993] S4 E9 N4 W9$ E35 N38$ PTR=N15 FUS=[YR=1993] N38
W18 FOP=[YR=1993] N6 W24 S6 E24$ W42 S38 E60$ S15$.

EXTRA FEATURES

LN	OB/XF CODE	DESCRIPTION	BLD	CAP	L	W	UNITS	UT	Adj R	ADJ UNIT PRICE	ORIG COND	YEAR ON	YEAR ACTUAL	Q	% COND	OB/XF MKT VALUE	NOTES

LAND DESCRIPTION

TOTAL OB/XF 0

LN	USE CODE	CLS	LAND USE DESCRIPTION	CAP	RD	LOC ZONE	FRONT	DEPTH	TOT LND UTS	UNIT TYPE	DT	DPTH FACT	% COND	TOT ADJ	UNIT PRICE	ADJ UNIT PRICE	LAND VALUE	OTHER ADJUSTMENTS AND NOTES	YEAR	DENSITY	DECL	FRZ	YR	CONSRV

REVIEW DATE 01/13/2021 BY KK Total Acres: 0.00 Total Land Value: 0 Market: 0 Agricultural: 0 Common: 0 PRINTED 08/02/2023 BY SYS

PT OF NW1/4 OF NW1/4 OF
SEC 15-3N-24E IN OR 2561/842
ESMT IN OR 557/520 & UTIL

EO HILLIARD HOLDINGS LLC &/FLORIDA PR LLC & ET AL
13871 CR 1567
ADA, OK 74820

2023

15-3N-24-0000-0002-0030

BUILDING CHARACTERISTICS

ELEMENT	CD	CONSTRUCTION
Exterior Wall	20	FACE BRICK 100
Roof Structur	04	WOOD TRUSS 100
Roof Cover	03	COMP SHNGL 100
Interior Wall	05	DRYWALL 100
Interior Floo	14	CARPET 100
Air Condition	03	CENTRAL 100
Heating Type	04	AIR DUCTED 100
Bedrooms		3 100
Bathrooms		2 100
Frame	02	WOOD FRAME 100
Story Height		0 100
RMS		0 100
Units		4 100
BUD8 Adjustme	04	DIST 01 100
Quality	03	Quality Level 03

DOR CODE 0300 MULTI-FAMILY
MAP NUM | MKT AREA 06
NEIGHBORHOOD/LOC 000

AREA TYPE	TOTAL GROSS AREA	PCT OF BASE	TOT ADJ AREA	SUBAREA MARKET VALUE
BAS	2,768	100	2,768	247,142
FOP	150	30	45	4,018
FOP	150	30	45	4,018
FOP	280	30	84	7,500
FUS	2,748	100	2,748	245,356
TOTALS	6,096		5,690	508,034

MARKET ADJUSTMENTS

TYPE	MDL	EFF. AREA	TOT ADJ PTS	EFF. BASE RATE	REPL. COST NEW	AYB	EYB	ECON	FNCT		NORM	% COND
0301	03	5,690	117.3000	103.22	587,322	1974	2004	0	0	0	13.50	86.50

8 APARTMENT – 0% - 2023 Heated Area: 5516 HX Base Yr

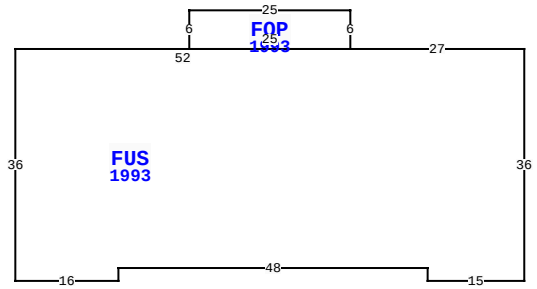

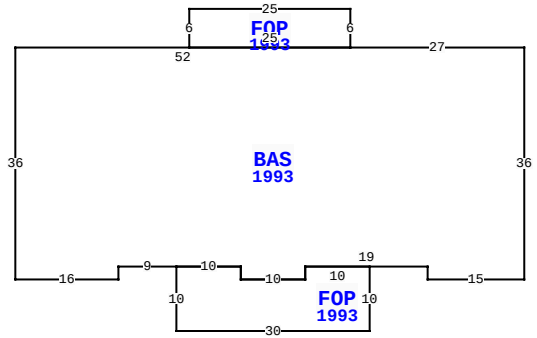

37031 CODY CIR, HILLIARD

BLD DATE	01/13/2021	KK	LGL DATE	
XF DATE	01/13/2021	KK	LAND DATE	01/13/2021 KK
INC DATE			AG DATE	

NASSAU COUNTY PROPERTY

PAGE 8 of 15 3

VALUATION SUMMARY

VALUATION BY	DIRECT_CAP
Tax Group: 3	Tax Dist:
BUILDING MARKET VALUE	0
TOTAL MARKET OB/XF VALUE	0
TOTAL LAND VALUE - MARKET	0
TOTAL MARKET VALUE	11,513,033
SOH/AGL Deduction	0
ASSESSED VALUE	11,513,033
TOTAL EXEMPTION VALUE	0
BASE TAXABLE VALUE	11,513,033
TOTAL JUST VALUE	11,513,033
NCON VALUE	0
INCOME VALUE	11,513,033
PREVIOUS YEAR MKT VALUE	11,516,608

PERMIT NUM	DESCRIPTION	AMT	ISSUED

SALES DATA

OFF RECORD Number	DATE	TYPE INST	Q U	V I	RSN CD	SALE PRICE
2561/0842	5/06/2022	SW	Q	I	01	13,500,000
GRANTOR: EASTWOOD OAKS LLC						
GRANTEE: EO HILLIARD HOLDING						
2215/0691	7/31/2018	WD	Q	I	01	7,000,000
GRANTOR: EASTWOOD OAKS APARTME						
GRANTEE: EASTWOOD OAKS LLC						

BUILDING NOTES

BUILDING DIMENSIONS

BAS=[YR=1993] W27 FOP=[YR=1993] N6 W25 S6 E25$ W52S36 E16 N2 E9 FOP=[YR=1993] S10 E30 N10 W10 S2 W10 N2 W10$ E10 S2 E10 N2 E19 S2 E15 N36$ PTR=N15 FUS=[YR=1993] N36 W27 FOP=[YR=1993] N6 W25 S6 E25$W52 S36 E16 N2 E48 S2 E15 $ S15$.

EXTRA FEATURES

LN	OB/XF CODE	DESCRIPTION	BLD	CAP	L	W	UNITS	UT	Adj R	ADJ UNIT PRICE	ORIG COND	YEAR ON	YEAR ACTUAL	Q	% COND	OB/XF MKT VALUE	NOTES

LAND DESCRIPTION

TOTAL OB/XF 0

LN	USE CODE	CLS	LAND USE DESCRIPTION	CAP	RD	LOC ZONE	FRONT	DEPTH	TOT LND UTS	UNIT TYPE	DT	DPTH FACT	% COND	TOT ADJ	UNIT PRICE	ADJ UNIT PRICE	LAND VALUE	OTHER ADJUSTMENTS AND NOTES	YEAR	DENSITY	DECL	FRZ	YR	CONSRV

REVIEW DATE 01/13/2021 BY KK Total Acres: 0.00 Total Land Value: 0 Market: 0 Agricultural: 0 Common: 0 PRINTED 08/02/2023 BY SYS

PT OF NW1/4 OF NW1/4 OF
SEC 15-3N-24E IN OR 2561/842
ESMT IN OR 557/520 & UTIL

EO HILLIARD HOLDINGS LLC &/FLORIDA PR LLC & ET AL
13871 CR 1567
ADA, OK 74820

2023

15-3N-24-0000-0002-0030

NASSAU COUNTY PROPERTY

BUILDING CHARACTERISTICS

ELEMENT	CD	CONSTRUCTION
Exterior Wall	20	FACE BRICK 100
Roof Structur	04	WOOD TRUSS 100
Roof Cover	03	COMP SHNGL 100
Interior Wall	05	DRYWALL 100
Interior Floo	14	CARPET 100
Air Condition	03	CENTRAL 100
Heating Type	04	AIR DUCTED 100
Bedrooms		2 100
Bathrooms		2 100
Frame	02	WOOD FRAME 100
Story Height		0 100
RMS		0 100
Units		4 100
BUD8 Adjustme	04	DIST 01 100
Quality	03	Quality Level 03

DOR CODE 0300 MULTI-FAMILY
MAP NUM | MKT AREA 06
NEIGHBORHOOD/LOC 000

AREA TYPE	TOTAL GROSS AREA	PCT OF BASE	TOT ADJ AREA	SUBAREA MARKET VALUE
BAS	2,318	100	2,318	205,179
FOP	150	30	45	3,983
FOP	150	30	45	3,983
FUS	2,318	100	2,318	205,179
UOP	36	20	7	619
TOTALS	4,972		4,733	418,944

MARKET ADJUSTMENTS

TYPE	MDL	EFF. AREA	TOT ADJ PTS	EFF. BASE RATE	REPL. COST NEW	AYB	EYB	ECON	FNCT		NORM	% COND
0301	03	4,733	116.2800	102.33	484,328	1974	2004	0	0	0	13.50	86.50

9 APARTMENT – 0% - 2023 Heated Area: 4636 HX Base Yr

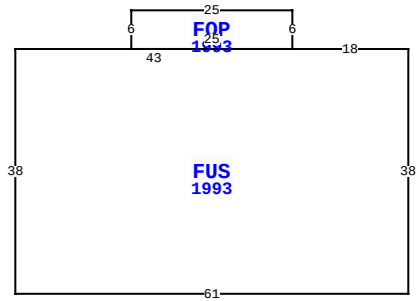

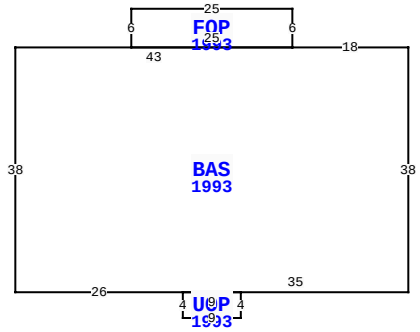

37031 CODY CIR, HILLIARD

BLD DATE	01/13/2021	KK	LGL DATE	
XF DATE	01/13/2021	KK	LAND DATE	01/13/2021 KK
INC DATE			AG DATE	

VALUATION SUMMARY

VALUATION BY	DIRECT_CAP
Tax Group: 3	Tax Dist:
BUILDING MARKET VALUE	0
TOTAL MARKET OB/XF VALUE	0
TOTAL LAND VALUE - MARKET	0
TOTAL MARKET VALUE	11,513,033
SOH/AGL Deduction	0
ASSESSED VALUE	11,513,033
TOTAL EXEMPTION VALUE	0
BASE TAXABLE VALUE	11,513,033
TOTAL JUST VALUE	11,513,033
NCON VALUE	0
INCOME VALUE	11,513,033
PREVIOUS YEAR MKT VALUE	11,516,608

PERMIT NUM	DESCRIPTION	AMT	ISSUED

SALES DATA

OFF RECORD Number	DATE	TYPE INST	Q / U	V / I	RSN CD	SALE PRICE
2561/0842	5/06/2022	SW	Q	I	01	13,500,000
GRANTOR: EASTWOOD OAKS LLC						
GRANTEE: EO HILLIARD HOLDING						
2215/0691	7/31/2018	WD	Q	I	01	7,000,000
GRANTOR: EASTWOOD OAKS APARTME						
GRANTEE: EASTWOOD OAKS LLC						

BUILDING NOTES

BUILDING DIMENSIONS

BAS=[YR=1993] W18 FOP=[YR=1993] N6 W25 S6 E25$ W43S38 E26
UOP=[YR=1993] S4 E9 N4 W9$ E35 N38$ PTR=N15 FUS=[YR=1993] N38
W18 FOP=[YR=1993] N6 W25 S6 E25$ W43 S38 E61$ S15$.

EXTRA FEATURES

L N	OB/XF CODE	DESCRIPTION	BLD	CAP	L	W	UNITS	UT	Adj R	ADJ UNIT PRICE	ORIG COND	YEAR ON	YEAR ACTUAL	Q	% COND	OB/XF MKT VALUE	NOTES

LAND DESCRIPTION

TOTAL OB/XF 0

L N	USE CODE	CLS	LAND USE DESCRIPTION	CAP	R D	LOC ZONE	FRONT	DEPTH	TOT LND UTS	UNIT TYPE	D T	DPTH FACT	% COND	TOT ADJ	UNIT PRICE	ADJ UNIT PRICE	LAND VALUE	OTHER ADJUSTMENTS AND NOTES	YEAR	DENSITY	DECL	FRZ	YR	CONSRV

REVIEW DATE 01/13/2021 BY KK Total Acres: 0.00 Total Land Value: 0 Market: 0 Agricultural: 0 Common: 0 PRINTED 08/02/2023 BY SYS

PT OF NW1/4 OF NW1/4 OF
SEC 15-3N-24E IN OR 2561/842
ESMT IN OR 557/520 & UTIL

EO HILLIARD HOLDINGS LLC &/FLORIDA PR LLC & ET AL
13871 CR 1567
ADA, OK 74820

2023

15-3N-24-0000-0002-0030

NASSAU COUNTY PROPERTY

BUILDING CHARACTERISTICS

ELEMENT	CD	CONSTRUCTION
Exterior Wall	20	FACE BRICK 100
Roof Structur	04	WOOD TRUSS 100
Roof Cover	03	COMP SHNGL 100
Interior Wall	05	DRYWALL 100
Interior Floo	14	CARPET 100
Air Condition	03	CENTRAL 100
Heating Type	04	AIR DUCTED 100
Bedrooms		3 100
Bathrooms		2 100
Frame	02	WOOD FRAME 100
Story Height		0 100
RMS		0 100
Units		4 100
BUD8 Adjustme	04	DIST 01 100
Quality	03	Quality Level 03

DOR CODE 0300 MULTI-FAMILY
MAP NUM | MKT AREA 06
NEIGHBORHOOD/LOC 000

AREA TYPE	TOTAL GROSS AREA	PCT OF BASE	TOT ADJ AREA	SUBAREA MARKET VALUE
BAS	2,768	100	2,768	247,142
FOP	150	30	45	4,018
FOP	150	30	45	4,018
FOP	190	30	57	5,090
FUS	2,748	100	2,748	245,356
TOTALS	6,006		5,663	505,623

MARKET ADJUSTMENTS

TYPE	MDL	EFF. AREA	TOT ADJ PTS	EFF. BASE RATE	REPL. COST NEW	AYB	EYB	ECON	FNCT		NORM	% COND
0301	03	5,663	117.3000	103.22	584,535	1974	2004	0	0	0	13.50	86.50

10 APARTMENT – 0% - 2023 Heated Area: 5516 HX Base Yr

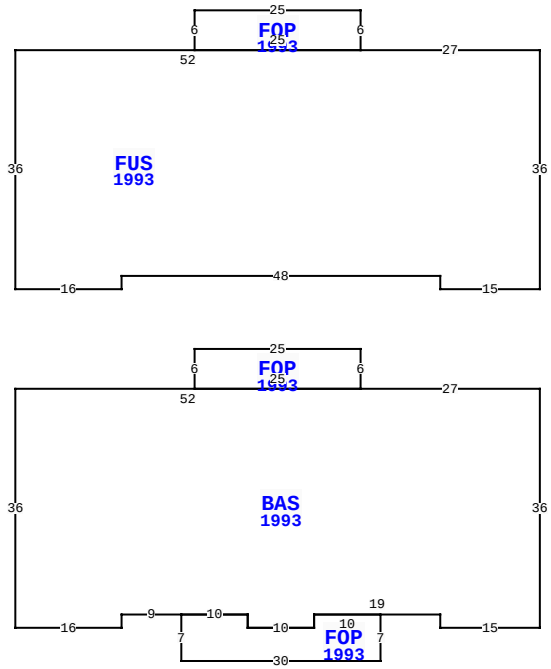

37031 CODY CIR, HILLIARD

BLD DATE	01/13/2021	KK	LGL DATE	
XF DATE	01/13/2021	KK	LAND DATE	01/13/2021 KK
INC DATE			AG DATE	

VALUATION SUMMARY

VALUATION BY	DIRECT_CAP
Tax Group: 3	Tax Dist:
BUILDING MARKET VALUE	0
TOTAL MARKET OB/XF VALUE	0
TOTAL LAND VALUE - MARKET	0
TOTAL MARKET VALUE	11,513,033
SOH/AGL Deduction	0
ASSESSED VALUE	11,513,033
TOTAL EXEMPTION VALUE	0
BASE TAXABLE VALUE	11,513,033
TOTAL JUST VALUE	11,513,033
NCON VALUE	0
INCOME VALUE	11,513,033
PREVIOUS YEAR MKT VALUE	11,516,608

PERMIT NUM	DESCRIPTION	AMT	ISSUED

SALES DATA

OFF RECORD Number	DATE	TYPE INST	Q U	V I	RSN CD	SALE PRICE
2561/0842	5/06/2022	SW	Q	I	01	13,500,000
GRANTOR: EASTWOOD OAKS LLC						
GRANTEE: EO HILLIARD HOLDING						
2215/0691	7/31/2018	WD	Q	I	01	7,000,000
GRANTOR: EASTWOOD OAKS APARTME						
GRANTEE: EASTWOOD OAKS LLC						

BUILDING NOTES

BUILDING DIMENSIONS

BAS=[YR=1993] W27 FOP=[YR=1993] N6 W25 S6 E25$ W52S36 E16 N2 E9 FOP=[YR=1993] S7 E30 N7 W10 S2 W10 N2 W10$ E10 S2 E10 N2 E19 S2 E15 N36$ PTR=N15 FUS=[YR=1993] N36 W27 FOP=[YR=1993] N6 W25 S6 E25$ W52 S36 E16 N2 E48 S2 E15$ S15$.

EXTRA FEATURES

LN	OB/XF CODE	DESCRIPTION	BLD	CAP	L	W	UNITS	UT	Adj R	ADJ UNIT PRICE	ORIG COND	YEAR ON	YEAR ACTUAL	Q	% COND	OB/XF MKT VALUE	NOTES

LAND DESCRIPTION

TOTAL OB/XF 0

LN	USE CODE	CLS	LAND USE DESCRIPTION	CAP	RD	LOC ZONE	FRONT	DEPTH	TOT LND UTS	UNIT TYPE	DT	DPTH FACT	% COND	TOT ADJ	UNIT PRICE	ADJ UNIT PRICE	LAND VALUE	OTHER ADJUSTMENTS AND NOTES	YEAR	DENSITY	DECL	FRZ	YR	CONSRV

REVIEW DATE 01/13/2021 BY KK Total Acres: 0.00 Total Land Value: 0 Market: 0 Agricultural: 0 Common: 0 PRINTED 08/02/2023 BY SYS

PT OF NW1/4 OF NW1/4 OF
SEC 15-3N-24E IN OR 2561/842
ESMT IN OR 557/520 & UTIL

EO HILLIARD HOLDINGS LLC &/FLORIDA PR LLC & ET AL
13871 CR 1567
ADA, OK 74820

2023

15-3N-24-0000-0002-0030

BUILDING CHARACTERISTICS

ELEMENT	CD	CONSTRUCTION
Exterior Wall	20	FACE BRICK 100
Roof Structur	04	WOOD TRUSS 100
Roof Cover	03	COMP SHNGL 100
Interior Wall	05	DRYWALL 100
Interior Floo	14	CARPET 100
Air Condition	03	CENTRAL 100
Heating Type	04	AIR DUCTED 100
Bedrooms		3 100
Bathrooms		2 100
Frame	02	WOOD FRAME 100
Story Height		0 100
RMS		0 100
Units		8 100
BUD8 Adjustme	04	DIST 01 100
Quality	03	Quality Level 03
DOR CODE	0300	MULTI-FAMILY
MAP NUM		MKT AREA 06
NEIGHBORHOOD/LOC	000	

AREA TYPE	TOTAL GROSS AREA	PCT OF BASE	TOT ADJ AREA	SUBAREA MARKET VALUE
BAS	5,506	100	5,506	477,174
FOP	150	30	45	3,900
FOP	150	30	45	3,900
FOP	150	30	45	3,900
FOP	150	30	45	3,900
FOP	190	30	57	4,940
FOP	190	30	57	4,940
FUS	5,466	100	5,466	473,708
TOTALS	11,952		11,266	976,361

MARKET ADJUSTMENTS

TYPE	MDL	EFF. AREA	TOT ADJ PTS	EFF. BASE RATE	REPL. COST NEW	AYB	EYB	ECON	FNCT		NORM	% COND
0301	03	11,266	113.8500	100.19	1,128,741	1974	2004	0	0	0	13.50	86.50

11 APARTMENT – 0% - 2023 Heated Area: 10972 HX Base Yr

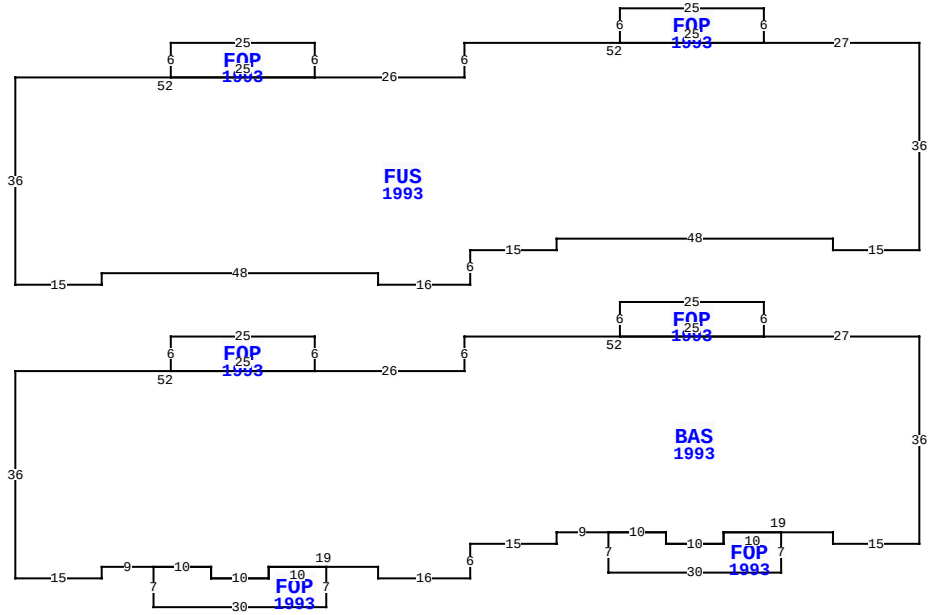

37031 CODY CIR, HILLIARD

BLD DATE	01/13/2021	KK	LGL DATE	
XF DATE	01/13/2021	KK	LAND DATE	01/13/2021 KK
INC DATE			AG DATE	

NASSAU COUNTY PROPERTY

VALUATION SUMMARY

VALUATION BY	DIRECT_CAP
Tax Group: 3	Tax Dist:
BUILDING MARKET VALUE	0
TOTAL MARKET OB/XF VALUE	0
TOTAL LAND VALUE - MARKET	0
TOTAL MARKET VALUE	11,513,033
SOH/AGL Deduction	0
ASSESSED VALUE	11,513,033
TOTAL EXEMPTION VALUE	0
BASE TAXABLE VALUE	11,513,033
TOTAL JUST VALUE	11,513,033
NCON VALUE	0
INCOME VALUE	11,513,033
PREVIOUS YEAR MKT VALUE	11,516,608

PERMIT NUM	DESCRIPTION	AMT	ISSUED

SALES DATA

OFF RECORD Number	DATE	TYPE INST	Q U	V I	RSN CD	SALE PRICE
2561/0842	5/06/2022	SW	Q	I	01	13,500,000
GRANTOR: EASTWOOD OAKS LLC						
GRANTEE: EO HILLIARD HOLDING						
2215/0691	7/31/2018	WD	Q	I	01	7,000,000
GRANTOR: EASTWOOD OAKS APARTME						
GRANTEE: EASTWOOD OAKS LLC						

BUILDING NOTES

BUILDING DIMENSIONS

BAS=[YR=1993] W27 FOP=[YR=1993] N6 W25 S6 E25$ W52S6 W26 FOP=[YR=1993] N6 W25 S6 E25$ W52 S36 E15 N2 E9 FOP=[YR=1993] S7 E30 N7 W10 S2 W10 N2 W10$ E10 S2 E10 N2E19 S2 E16 N6 E15 N2 E9 FOP=[YR=1993] S7E30 N7 W10 S2 W10 N2 W10$ E10 S2 E10 N2 E19 S2 E15 N36$ PTR=N15 FUS=[YR=1993] N36 W27 FOP=[YR=1993] N6 W25 S6 E25$ W52 S6 W26 FOP=[YR=1993] N6 W25 S6 E25$ W52 S36 E15 N2 E48 S2 E16 N6 E15 N2 E48 S2 E15$ S15$.

EXTRA FEATURES

L N	OB/XF CODE	DESCRIPTION	BLD	CAP	L	W	UNITS	UT	Adj R	ADJ UNIT PRICE	ORIG COND	YEAR ON	YEAR ACTUAL	Q	% COND	OB/XF MKT VALUE	NOTES

LAND DESCRIPTION

TOTAL OB/XF 0

L N	USE CODE	CLS	LAND USE DESCRIPTION	CAP	R D	LOC ZONE	FRONT	DEPTH	TOT LND UTS	UNIT TYPE	D T	DPTH FACT	% COND	TOT ADJ	UNIT PRICE	ADJ UNIT PRICE	LAND VALUE	OTHER ADJUSTMENTS AND NOTES	YEAR	DENSITY	DECL	FRZ	YR	CONSRV

REVIEW DATE 01/13/2021 BY KK Total Acres: 0.00 Total Land Value: 0 Market: 0 Agricultural: 0 Common: 0 PRINTED 08/02/2023 BY SYS

PT OF NW1/4 OF NW1/4 OF
SEC 15-3N-24E IN OR 2561/842
ESMT IN OR 557/520 & UTIL

EO HILLIARD HOLDINGS LLC &/FLORIDA PR LLC & ET AL
13871 CR 1567
ADA, OK 74820

2023

15-3N-24-0000-0002-0030

BUILDING CHARACTERISTICS

ELEMENT	CD	CONSTRUCTION
Exterior Wall	20	FACE BRICK 100
Roof Structur	04	WOOD TRUSS 100
Roof Cover	03	COMP SHNGL 100
Interior Wall	05	DRYWALL 100
Interior Floo	14	CARPET 100
Air Condition	03	CENTRAL 100
Heating Type	04	AIR DUCTED 100
Bedrooms		3 100
Bathrooms		2 100
Frame	02	WOOD FRAME 100
Story Height		0 100
RMS		0 100
Units		8 100
BUD8 Adjustme	04	DIST 01 100
Quality	03	Quality Level 03

DOR CODE 0300 MULTI-FAMILY
MAP NUM | MKT AREA 06
NEIGHBORHOOD/LOC 000

AREA TYPE	TOTAL GROSS AREA	PCT OF BASE	TOT ADJ AREA	SUBAREA MARKET VALUE
BAS	5,536	100	5,536	479,774
FOP	150	30	45	3,900
FOP	150	30	45	3,900
FOP	150	30	45	3,900
FOP	150	30	45	3,900
FOP	190	30	57	4,940
FOP	190	30	57	4,940
FUS	5,496	100	5,496	476,307
TOTALS	12,012		11,326	981,560

MARKET ADJUSTMENTS

TYPE	MDL	EFF. AREA	TOT ADJ PTS	EFF. BASE RATE	REPL. COST NEW	AYB	EYB	ECON	FNCT		NORM	% COND
0301	03	11,326	113.8500	100.19	1,134,752	1974	2004	0	0	0	13.50	86.50

12 APARTMENT – 0% - 2023 Heated Area: 11032 HX Base Yr

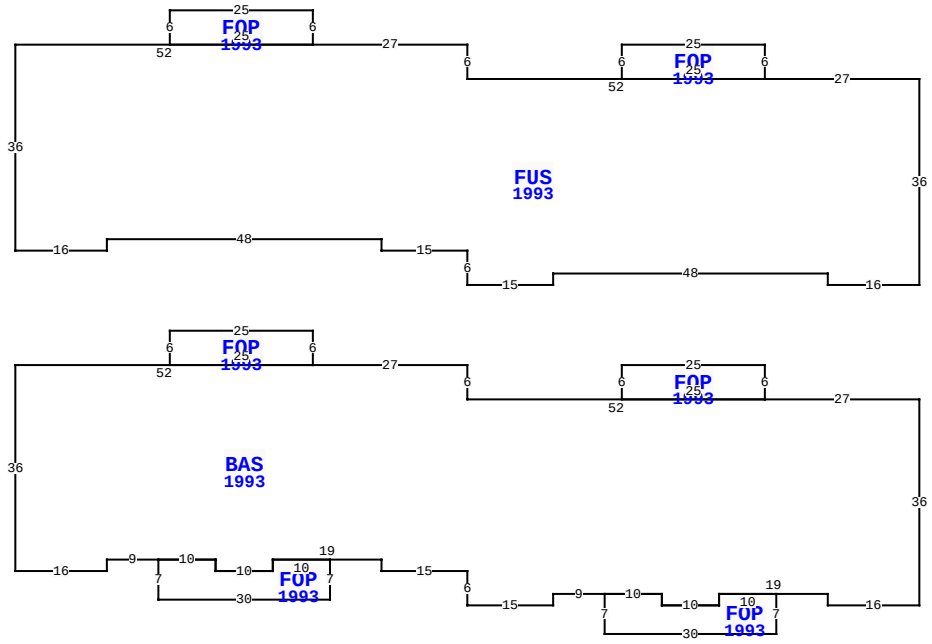

37031 CODY CIR, HILLIARD

BLD DATE	01/13/2021	KK	LGL DATE	
XF DATE	01/13/2021	KK	LAND DATE	01/13/2021 KK
INC DATE			AG DATE	

NASSAU COUNTY PROPERTY

PAGE 12 of 15 3

VALUATION SUMMARY

VALUATION BY	DIRECT_CAP
Tax Group: 3	Tax Dist:
BUILDING MARKET VALUE	0
TOTAL MARKET OB/XF VALUE	0
TOTAL LAND VALUE - MARKET	0
TOTAL MARKET VALUE	11,513,033
SOH/AGL Deduction	0
ASSESSED VALUE	11,513,033
TOTAL EXEMPTION VALUE	0
BASE TAXABLE VALUE	11,513,033
TOTAL JUST VALUE	11,513,033
NCON VALUE	0
INCOME VALUE	11,513,033
PREVIOUS YEAR MKT VALUE	11,516,608

PERMIT NUM	DESCRIPTION	AMT	ISSUED

SALES DATA

OFF RECORD Number	DATE	TYPE INST	Q U	V I	RSN CD	SALE PRICE
2561/0842	5/06/2022	SW	Q	I	01	13,500,000
GRANTOR: EASTWOOD OAKS LLC						
GRANTEE: EO HILLIARD HOLDING						
2215/0691	7/31/2018	WD	Q	I	01	7,000,000
GRANTOR: EASTWOOD OAKS APARTME						
GRANTEE: EASTWOOD OAKS LLC						

BUILDING NOTES

BUILDING DIMENSIONS

BAS=[YR=1993] W27 FOP=[YR=1993] N6 W25 S6 E25$ W52N6 W27 FOP=[YR=1993] N6 W25 S6 E25$ W52 S36 E16 N2 E9 FOP=[YR=1993] S7 E30 N7 W10 S2 W10 N2 W10$ E10 S2 E10 N2 E19 S2 E15 S6 E15 N2 E9 FOP=[YR=1993] S7 E30 N7 W10 S2 W10 N2 W10$ E10 S2 E10 N2 E19 S2 E16 N36$ PTR= N20 FUS=[YR=1993] N36 W27 FOP=[YR=1993] N6 W25 S6 E25$ W52 N6 W27 FOP=[YR=1993] N6 W25 S6 E25$ W52 S36 E16 N2 E48 S2 E15 S6 E15 N2 E48 S2 E16$ S20$.

EXTRA FEATURES

LN	OB/XF CODE	DESCRIPTION	BLD	CAP	L	W	UNITS	UT	Adj R	ADJ UNIT PRICE	ORIG COND	YEAR ON	YEAR ACTUAL	Q	% COND	OB/XF MKT VALUE	NOTES

LAND DESCRIPTION

TOTAL OB/XF 0

LN	USE CODE	CLS	LAND USE DESCRIPTION	CAP	RD	LOC ZONE	FRONT	DEPTH	TOT LND UTS	UNIT TYPE	DT	DPTH FACT	% COND	TOT ADJ	UNIT PRICE	ADJ UNIT PRICE	LAND VALUE	OTHER ADJUSTMENTS AND NOTES	YEAR	DENSITY	DECL	FRZ	YR	CONSRV

REVIEW DATE 01/13/2021 BY KK Total Acres: 0.00 Total Land Value: 0 Market: 0 Agricultural: 0 Common: 0 PRINTED 08/02/2023 BY SYS

PT OF NW1/4 OF NW1/4 OF
SEC 15-3N-24E IN OR 2561/842
ESMT IN OR 557/520 & UTIL

EO HILLIARD HOLDINGS LLC &/FLORIDA PR LLC & ET AL
13871 CR 1567
ADA, OK 74820

2023

15-3N-24-0000-0002-0030

NASSAU COUNTY PROPERTY

BUILDING CHARACTERISTICS

ELEMENT	CD	CONSTRUCTION
Exterior Wall	20	FACE BRICK 100
Roof Structur	04	WOOD TRUSS 100
Roof Cover	03	COMP SHNGL 100
Interior Wall	05	DRYWALL 100
Interior Floo	14	CARPET 100
Air Condition	03	CENTRAL 100
Heating Type	04	AIR DUCTED 100
Bedrooms		3 100
Bathrooms		2 100
Frame	02	WOOD FRAME 100
Story Height		0 100
RMS		0 100
Units		8 100
BUD8 Adjustme	04	DIST 01 100
Quality	03	Quality Level 03

DOR CODE 0300 MULTI-FAMILY
MAP NUM | MKT AREA 06
NEIGHBORHOOD/LOC 000

AREA TYPE	TOTAL GROSS AREA	PCT OF BASE	TOT ADJ AREA	SUBAREA MARKET VALUE
BAS	5,506	100	5,506	477,174
FOP	150	30	45	3,900
FOP	150	30	45	3,900
FOP	190	30	57	4,940
FOP	190	30	57	4,940
FOP	150	30	45	3,900
FOP	150	30	45	3,900
FUS	5,466	100	5,466	473,708
TOTALS	11,952		11,266	976,361

MARKET ADJUSTMENTS

TYPE	MDL	EFF. AREA	TOT ADJ PTS	EFF. BASE RATE	REPL. COST NEW	AYB	EYB	ECON	FNCT		NORM	% COND
0301	03	11,266	113.8500	100.19	1,128,741	1974	2004	0	0	0	13.50	86.50

13 APARTMENT – 0% - 2023 Heated Area: 10972 HX Base Yr

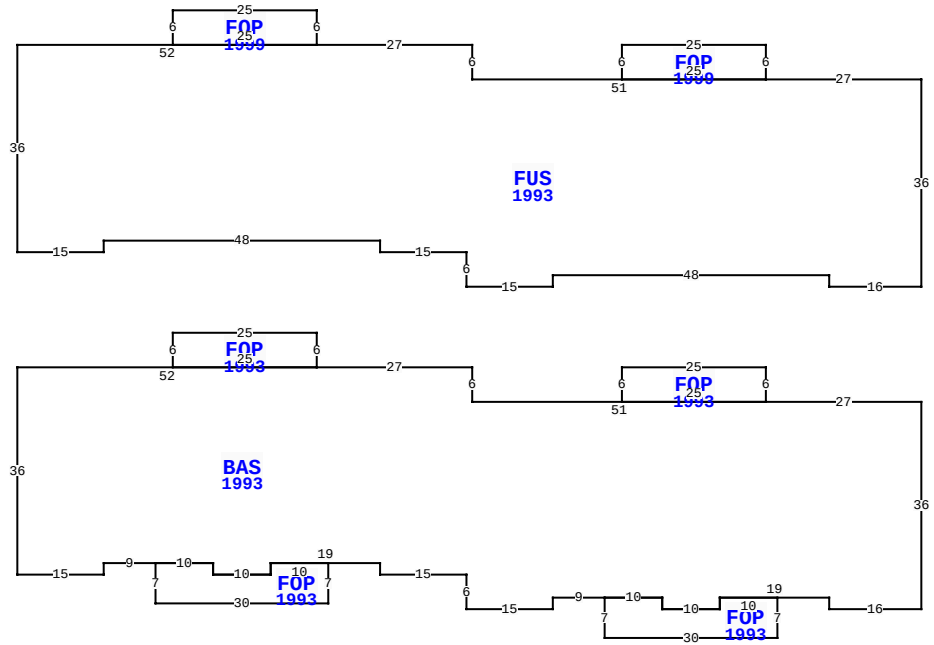

37031 CODY CIR, HILLIARD

BLD DATE	01/13/2021	KK	LGL DATE	
XF DATE	01/13/2021	KK	LAND DATE	01/13/2021 KK
INC DATE			AG DATE	

VALUATION SUMMARY

VALUATION BY	DIRECT_CAP
Tax Group: 3	Tax Dist:
BUILDING MARKET VALUE	0
TOTAL MARKET OB/XF VALUE	0
TOTAL LAND VALUE - MARKET	0
TOTAL MARKET VALUE	11,513,033
SOH/AGL Deduction	0
ASSESSED VALUE	11,513,033
TOTAL EXEMPTION VALUE	0
BASE TAXABLE VALUE	11,513,033
TOTAL JUST VALUE	11,513,033
NCON VALUE	0
INCOME VALUE	11,513,033
PREVIOUS YEAR MKT VALUE	11,516,608

PERMIT NUM	DESCRIPTION	AMT	ISSUED

SALES DATA

OFF RECORD Number	DATE	TYPE INST	Q U	V I	RSN CD	SALE PRICE
2561/0842	5/06/2022	SW	Q	I	01	13,500,000
GRANTOR: EASTWOOD OAKS LLC						
GRANTEE: EO HILLIARD HOLDING						
2215/0691	7/31/2018	WD	Q	I	01	7,000,000
GRANTOR: EASTWOOD OAKS APARTME						
GRANTEE: EASTWOOD OAKS LLC						

BUILDING NOTES

BUILDING DIMENSIONS

BAS=[YR=1993] W27 FOP=[YR=1993] N6 W25 S6 E25$ W51N6 W27 FOP=[YR=1993] N6 W25 S6 E25$ W52 S36 E15 N2 E9 FOP=[YR=1993] S7 E30 N7 W10 S2 W10 N2 W10$ E10 S2 E10 N2 E19 S2 E15 S6 E15 N2 E9 FOP=[YR=1993] S7 E30 N7 W10 S2 W10 N2 W10$ E10 S2 E10 N2 E19 S2 E16 N36$ PTR= N20 FUS=[YR=1993] N36 W27 FOP=[YR=1999] N6 W25 S6 E25$ W51 N6 W27 FOP=[YR=1999] N6 W25 S6 E25$ W52 S36 E15 N2 E48 S2 E15 S6 E15 N2 E48 S2 E16$ S20$.

EXTRA FEATURES

L N	OB/XF CODE	DESCRIPTION	BLD	CAP	L	W	UNITS	UT	Adj R	ADJ UNIT PRICE	ORIG COND	YEAR ON	YEAR ACTUAL	Q	% COND	OB/XF MKT VALUE	NOTES

LAND DESCRIPTION

TOTAL OB/XF 0

L N	USE CODE	CLS	LAND USE DESCRIPTION	CAP	R D	LOC ZONE	FRONT	DEPTH	TOT LND UTS	UNIT TYPE	D T	DPTH FACT	% COND	TOT ADJ	UNIT PRICE	ADJ UNIT PRICE	LAND VALUE	OTHER ADJUSTMENTS AND NOTES	YEAR	DENSITY	DECL	FRZ	YR	CONSRV

REVIEW DATE 01/13/2021 BY KK Total Acres: 0.00 Total Land Value: 0 Market: 0 Agricultural: 0 Common: 0 PRINTED 08/02/2023 BY SYS

PT OF NW1/4 OF NW1/4 OF
SEC 15-3N-24E IN OR 2561/842
ESMT IN OR 557/520 & UTIL

EO HILLIARD HOLDINGS LLC &/FLORIDA PR LLC & ET AL
13871 CR 1567
ADA, OK 74820

2023

15-3N-24-0000-0002-0030

BUILDING CHARACTERISTICS

ELEMENT	CD	CONSTRUCTION
Exterior Wall	20	FACE BRICK 100
Roof Structur	04	WOOD TRUSS 100
Roof Cover	03	COMP SHNGL 100
Interior Wall	05	DRYWALL 100
Interior Floo	14	CARPET 100
Air Condition	03	CENTRAL 100
Heating Type	04	AIR DUCTED 100
Bedrooms		1 100
Bathrooms		1 100
Frame	02	WOOD FRAME 100
Story Height		0 100
RMS		0 100
Units		16 100
BUD8 Adjustme	04	DIST 01 100
Quality	03	Quality Level 03
DOR CODE	0300	MULTI-FAMILY
MAP NUM		MKT AREA 06
NEIGHBORHOOD/LOC	000	

AREA TYPE	TOTAL GROSS AREA	PCT OF BASE	TOT ADJ AREA	SUBAREA MARKET VALUE
BAS	6,894	100	6,894	565,024
FOP	36	30	11	901
FOP	36	30	11	901
FOP	36	30	11	901
FOP	132	30	40	3,278
FOP	132	30	40	3,278
FOP	132	30	40	3,278
FOP	132	30	40	3,278
FOP	138	30	41	3,361
FOP	138	30	41	3,361
TOTALS	14,961		14,122	1,157,422

MARKET ADJUSTMENTS

TYPE	MDL	EFF. AREA	TOT ADJ PTS	EFF. BASE RATE	REPL. COST NEW	AYB	EYB	ECON	FNCT		NORM	% COND
0301	03	14,122	107.6700	94.75	1,338,060	1974	2004	0	0	0	13.50	86.50

14 APARTMENT – 0% - 2023 Heated Area: 13761 HX Base Yr

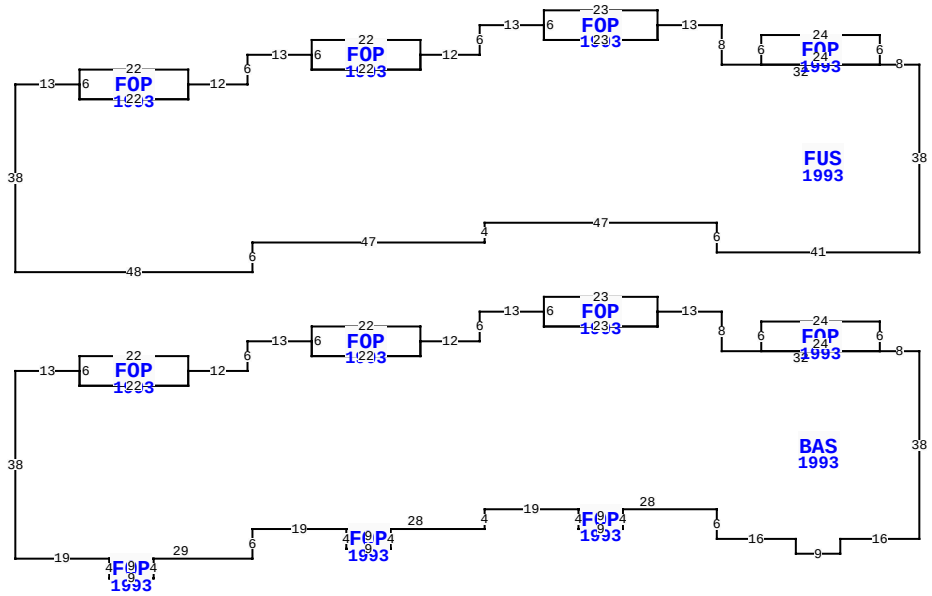

** This building has 13 Sub-Areas

37031 CODY CIR, HILLIARD

BLD DATE	01/13/2021	KK	LGL DATE	
XF DATE	01/13/2021	KK	LAND DATE	01/13/2021 KK
INC DATE			AG DATE	

NASSAU COUNTY PROPERTY

VALUATION SUMMARY

VALUATION BY	DIRECT_CAP
Tax Group: 3	Tax Dist:
BUILDING MARKET VALUE	0
TOTAL MARKET OB/XF VALUE	0
TOTAL LAND VALUE - MARKET	0
TOTAL MARKET VALUE	11,513,033
SOH/AGL Deduction	0
ASSESSED VALUE	11,513,033
TOTAL EXEMPTION VALUE	0
BASE TAXABLE VALUE	11,513,033
TOTAL JUST VALUE	11,513,033
NCON VALUE	0
INCOME VALUE	11,513,033
PREVIOUS YEAR MKT VALUE	11,516,608

PERMIT NUM	DESCRIPTION	AMT	ISSUED

SALES DATA

OFF RECORD Number	DATE	TYPE INST	Q / U	V / I	RSN CD	SALE PRICE
2561/0842	5/06/2022	SW	Q	I	01	13,500,000
GRANTOR: EASTWOOD OAKS LLC						
GRANTEE: EO HILLIARD HOLDING						
2215/0691	7/31/2018	WD	Q	I	01	7,000,000
GRANTOR: EASTWOOD OAKS APARTME						
GRANTEE: EASTWOOD OAKS LLC						

BUILDING NOTES

BUILDING DIMENSIONS

BAS=[YR=1993] W8 FOP=[YR=1993] N6 W24 S6 E24$ W32 N8 W13
FOP=[YR=1993] N3 W23 S6 E23 N3$ S3 W23 N3 W13 S6 W12
FOP=[YR=1993] N3 W22 S6 E22 N3$ S3 W22 N3 W13 S6 W12
FOP=[YR=1993] N3 W22 S6 E22 N3$ S3 W22 N3 W13 S38 E19
FOP=[YR=1993] S4 E9 N4 W9$ E29 N6 E19 FOP=[YR=1993] S4 E9N4
W9$ E28 N4 E19 FOP=[YR=1993] S4 E9 N4W9$ E28 S6 E16 S3 E9 N3
E16 N38$ PTR=N20 FUS=[YR=1993] N38 W8 FOP=[YR=1993] N6W24 S6
E24$ W32 N8 W13 FOP=[YR=1993] N3 W23S6E23N3$S3
W23N3W13S6W12FOP=[YR=1993] N3 W22S6 E22N3$S3W22N3W13S6W12
FOP=[YR=1993] N3W22S6E22N3$S3W22N3W13 S38E48
N6E47N4E47S6E41$S20$.

EXTRA FEATURES

L N	OB/XF CODE	DESCRIPTION	BLD	CAP	L	W	UNITS	UT	Adj R	ADJ UNIT PRICE	ORIG COND	YEAR ON	YEAR ACTUAL	Q	% COND	OB/XF MKT VALUE	NOTES

LAND DESCRIPTION

TOTAL OB/XF 0

L N	USE CODE	CLS	LAND USE DESCRIPTION	CAP	R D	LOC ZONE	FRONT	DEPTH	TOT LND UTS	UNIT TYPE	D T	DPTH FACT	% COND	TOT ADJ	UNIT PRICE	ADJ UNIT PRICE	LAND VALUE	OTHER ADJUSTMENTS AND NOTES	YEAR	DENSITY	DECL	FRZ	YR	CONSRV

REVIEW DATE 01/13/2021 BY KK Total Acres: 0.00 Total Land Value: 0 Market: 0 Agricultural: 0 Common: 0 PRINTED 08/02/2023 BY SYS

PT OF NW1/4 OF NW1/4 OF
SEC 15-3N-24E IN OR 2561/842
ESMT IN OR 557/520 & UTIL

EO HILLIARD HOLDINGS LLC &/FLORIDA PR LLC & ET AL
13871 CR 1567
ADA, OK 74820

2023

15-3N-24-0000-0002-0030

BUILDING CHARACTERISTICS

ELEMENT	CD	CONSTRUCTION
Exterior Wall	20	FACE BRICK 100
Roof Structur	04	WOOD TRUSS 100
Roof Cover	03	COMP SHNGL 100
Interior Wall	05	DRYWALL 100
Interior Floo	14	CARPET 100
Air Condition	03	CENTRAL 100
Heating Type	04	AIR DUCTED 100
Bedrooms		2 100
Bathrooms		2 100
Frame	02	WOOD FRAME 100
Story Height		0 100
RMS		0 100
Units		4 100
BUD8 Adjustme	04	DIST 01 100
Quality	03	Quality Level 03

DOR CODE 0300 MULTI-FAMILY
MAP NUM | MKT AREA 06
NEIGHBORHOOD/LOC 000

AREA TYPE	TOTAL GROSS AREA	PCT OF BASE	TOT ADJ AREA	SUBAREA MARKET VALUE
BAS	2,318	100	2,318	205,179
FOP	150	30	45	3,983
FOP	150	30	45	3,983
FUS	2,318	100	2,318	205,179
UOP	36	20	7	619
TOTALS	4,972		4,733	418,944

MARKET ADJUSTMENTS

TYPE	MDL	EFF. AREA	TOT ADJ PTS	EFF. BASE RATE	REPL. COST NEW	AYB	EYB	ECON	FNCT		NORM	% COND
0301	03	4,733	116.2800	102.33	484,328	1974	2004	0	0	0	13.50	86.50

15 APARTMENT – 0% - 2023 Heated Area: 4636 HX Base Yr

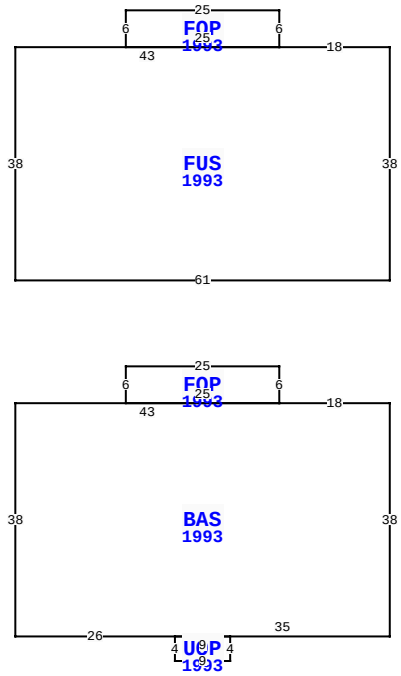

37031 CODY CIR, HILLIARD

BLD DATE	01/13/2021	KK	LGL DATE	
XF DATE	01/13/2021	KK	LAND DATE	01/13/2021 KK
INC DATE			AG DATE	

NASSAU COUNTY PROPERTY

VALUATION SUMMARY

VALUATION BY	DIRECT_CAP
Tax Group: 3	Tax Dist:
BUILDING MARKET VALUE	0
TOTAL MARKET OB/XF VALUE	0
TOTAL LAND VALUE - MARKET	0
TOTAL MARKET VALUE	11,513,033
SOH/AGL Deduction	0
ASSESSED VALUE	11,513,033
TOTAL EXEMPTION VALUE	0
BASE TAXABLE VALUE	11,513,033
TOTAL JUST VALUE	11,513,033
NCON VALUE	0
INCOME VALUE	11,513,033
PREVIOUS YEAR MKT VALUE	11,516,608

PERMIT NUM	DESCRIPTION	AMT	ISSUED

SALES DATA

OFF RECORD Number	DATE	TYPE INST	Q U	V I	RSN CD	SALE PRICE
2561/0842	5/06/2022	SW	Q	I	01	13,500,000
GRANTOR: EASTWOOD OAKS LLC						
GRANTEE: EO HILLIARD HOLDING						
2215/0691	7/31/2018	WD	Q	I	01	7,000,000
GRANTOR: EASTWOOD OAKS APARTME						
GRANTEE: EASTWOOD OAKS LLC						

BUILDING NOTES

BUILDING DIMENSIONS

BAS=[YR=1993] W18 FOP=[YR=1993] N6 W25 S6 E25$ W43S38 E26
UOP=[YR=1993] S4 E9 N4 W9$ E35 N38$ PTR=N20 FUS=[YR=1993] N38
W18 FOP=[YR=1993] N6 W25 S6 E25$ W43 S38 E61$ S20$.

EXTRA FEATURES

LN	OB/XF CODE	DESCRIPTION	BLD	CAP	L	W	UNITS	UT	Adj R	ADJ UNIT PRICE	ORIG COND	YEAR ON	YEAR ACTUAL	Q	% COND	OB/XF MKT VALUE	NOTES

LAND DESCRIPTION

TOTAL OB/XF 0

LN	USE CODE	CLS	LAND USE DESCRIPTION	CAP	RD	LOC ZONE	FRONT	DEPTH	TOT LND UTS	UNIT TYPE	DT	DPTH FACT	% COND	TOT ADJ	UNIT PRICE	ADJ UNIT PRICE	LAND VALUE	OTHER ADJUSTMENTS AND NOTES	YEAR	DENSITY	DECL	FRZ	YR	CONSRV

REVIEW DATE 01/13/2021 BY KK Total Acres: 0.00 Total Land Value: 0 Market: 0 Agricultural: 0 Common: 0 PRINTED 08/02/2023 BY SYS