PT OF LOTS 9 10 & 11 (S-3)
IN OR 1831/594
EX R/W OR 1114/426

CARRIGG DAVID
450671 SR 200
CALLAHAN, FL 32011

2023

15-2N-25-2980-0009-0030

NASSAU COUNTY PROPERTY

BUILDING CHARACTERISTICS

ELEMENT	CD	CONSTRUCTION
Exterior Wall	15	CONC BLOCK 50
Exterior Wall	19	COMMON BRK 50
Roof Structur	03	GABLE/HIP 100
Roof Cover	12	MODULAR MT 100
Interior Wall	05	DRYWALL 100
Interior Floo	14	CARPET 80
Interior Floo	11	CLAY TILE 20
Air Condition	03	CENTRAL 100
Heating Type	04	AIR DUCTED 100
Bedrooms		5 100
Bathrooms		3.5 100
Frame	02	WOOD FRAME 100
Stories	1.	1. 100
Units		0 100
Occupancy	00	NONE 100
Quality	05	Quality Level 05
DOR CODE	0100	SINGLE FAMILY
MAP NUM		MKT AREA 08
NEIGHBORHOOD/LOC	8026.00	

AREA TYPE	TOTAL GROSS AREA	PCT OF BASE	TOT ADJ AREA	SUBAREA MARKET VALUE
APT	1,102	100	1,102	83,662
BAS	2,380	100	2,380	180,686
FGR	1,435	55	789	59,900
FST	25	55	14	1,063
FST	70	55	38	2,885
FST	70	55	38	2,885
UOP	530	20	106	8,047
TOTALS	5,612		4,467	339,128

MARKET ADJUSTMENTS

TYPE	MDL	EFF. AREA	TOT ADJ PTS	EFF. BASE RATE	REPL. COST NEW	AYB	EYB	ECON	FNCT		NORM	% COND
0100	01	4,467	109.9648	99.24	443,305	1970	1985	0	0	0	23.50	76.50

1 SINGLE FAM – 100% - 2019 Heated Area: 3482 HX Base Yr 2019

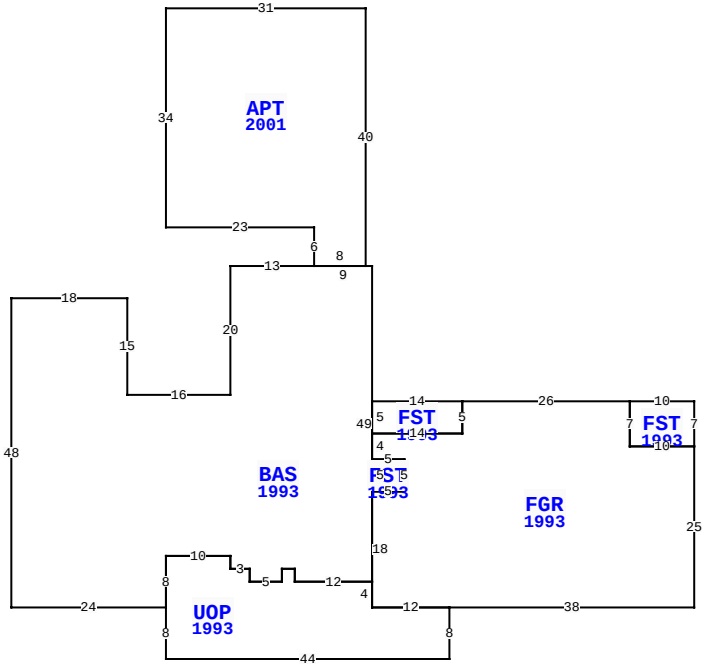

450671 W SR 200, CALLAHAN

BLD DATE		LGL DATE	
XF DATE		LAND DATE	
INC DATE		AG DATE	

NASSAU COUNTY PROPERTY — VALUATION SUMMARY

VALUATION BY		STANDARD
Tax Group: 6	Tax Dist:	
BUILDING MARKET VALUE		365,131
TOTAL MARKET OB/XF VALUE		15,193
TOTAL LAND VALUE - MARKET		45,850
TOTAL MARKET VALUE		426,174
SOH/AGL Deduction		137,146
ASSESSED VALUE		289,028
TOTAL EXEMPTION VALUE	HX HB	50,000
BASE TAXABLE VALUE		239,028
TOTAL JUST VALUE		426,174
NCON VALUE		0
INCOME VALUE		
PREVIOUS YEAR MKT VALUE		363,318

PERMIT NUM	DESCRIPTION	AMT	ISSUED
21006844	REPAIR/RRF	20,000	05/26/2021
E22571	ELEC OTHER	0	04/01/2010
M5717	REMODEL	0	02/01/2002

SALES DATA

OFF RECORD Number	DATE	TYPE INST	Q U	V I	RSN CD	SALE PRICE
1831/0594	12/12/2012	WD	U	I	12	63,000
GRANTOR: FANNIE MAE						
GRANTEE: CARRIGG DAVID						
1785/0460	3/26/2012	CT	U	I	18	100
GRANTOR: CLERK OF COURT						
GRANTEE: FEDERAL NATIONAL MO						

BUILDING NOTES

BUILDING DIMENSIONS

APT=[YR=2001] W31 S34 E23 S6 BAS=[YR=1993] W13 S20 W16 N15 W18 S48 E24 UOP=[YR=1993] S8 E44 N8 FGR=[YR=1993] E38 N25 FST=[YR=1993] N7 W10 S7 E10 $ W10 N7 W26 FST=[YR=1993] W14 S5 E14 N5 $ S5 W14 S4 FST=[YR=1993] E5 S5 W5 N5 $ E5 S5 W5 S18 E12 $ W12 N4 W12 N2 W2 S2 W5 N2 W3 N2 W10 S8 $ N8 E10 S2 E3 S2 E5 N2 E2 S2 E12 N49 W9 $ E8 N40 $.

EXTRA FEATURES

LN	OB/XF CODE	DESCRIPTION	BLD	CAP	L	W	UNITS	UT	Adj R	ADJ UNIT PRICE	ORIG COND	YEAR ON	YEAR ACTUAL	Q	% COND	OB/XF MKT VALUE	NOTES
1	0504	FP-ELECTRI	0	100	0	0	2.00	UT	2,000.00	2,000.00	100	1980	1980	3	49	1,960	
2	0812	CONCRETE C	0	100	0	0	750.00	SF	4.00	4.00	100	1980	1980	3	35	1,050	
3	0866	POOL FIBER	0	100	32	18	576.00	SF	39.60	39.60	100	1980	1980	3	20	4,562	
5	0812	CONCRETE C	0	100	12	42	504.00	SF	4.00	4.00	100	1980	1980	3	35	706	
6	1242	WD DECK A	0	100	0	0	480.00	SF	3.00	3.00	100	1980	1980	3	20	288	
7	0845	KOOL DECK	0	100	0	0	554.00	SF	7.25	7.25	100	1980	1980	3	35	1,406	
10	0350	CARPORT WD	0	100	14	12	168.00	SF	11.05	11.05	100	1995	1995	3	20	371	
11	0351	CARPORT MT	0	100	25	20	500.00	SF	10.00	10.00	100	2021	2021	3	97	4,850	

LAND DESCRIPTION

TOTAL OB/XF 15,193

LN	USE CODE	CLS	LAND USE DESCRIPTION	CAP	RD	LOC ZONE	FRONT	DEPTH	TOT LND UTS	UNIT TYPE	DT	DPTH FACT	% COND	TOT ADJ	UNIT PRICE	ADJ UNIT PRICE	LAND VALUE	OTHER ADJUSTMENTS AND NOTES	YEAR	DENSITY	DECL	FRZ	YR	CONSRV
1	000100	C	SFR	100		OR	246.00	228.00	1.31	AC		1.00	1.00	1.00	35,000.00	35,000.00	45,850							

REVIEW DATE 01/05/2022 BY KB Total Acres: 1.31 Total Land Value: 45,850 Market: 0 Agricultural: 0 Common: 45,850 PRINTED 08/02/2023 BY SYS

PT OF LOTS 9 10 & 11 (S-3)
IN OR 1831/594
EX R/W OR 1114/426

CARRIGG DAVID
450671 SR 200
CALLAHAN, FL 32011

2023

15-2N-25-2980-0009-0030

BUILDING CHARACTERISTICS

ELEMENT	CD	CONSTRUCTION
Exterior Wall	25	MOD METAL 100
Roof Structur	03	GABLE/HIP 100
Roof Cover	12	MODULAR MT 100
Interior Wall	01	MINIMUM 100
Interior Floo	03	CONC FINSH 100
Air Condition	01	NONE 100
Heating Type	01	NONE 100
Bedrooms		0 100
Bathrooms		0 100
Frame	05	STEEL 100
Stories	1.	1. 100
Units		0 100
Occupancy	00	NONE 100
Quality	06	Quality Level 06

DOR CODE	0100	SINGLE FAMILY	
MAP NUM		MKT AREA	08
NEIGHBORHOOD/LOC	8026.00		

AREA TYPE	TOTAL GROSS AREA	PCT OF BASE	TOT ADJ AREA	SUBAREA MARKET VALUE
BAS	1,080	100	1,080	26,003
TOTALS	1,080		1,080	26,003

MARKET ADJUSTMENTS

TYPE	MDL	EFF. AREA	TOT ADJ PTS	EFF. BASE RATE	REPL. COST NEW	AYB	EYB	ECON	FNCT		NORM	% COND
6500	01	1,080	69.4830	24.32	26,266	2021	2021	0	0	0	1.00	99.00

2 GARAGE RES – 100% - 2019 Heated Area: 1080 HX Base Yr 2019

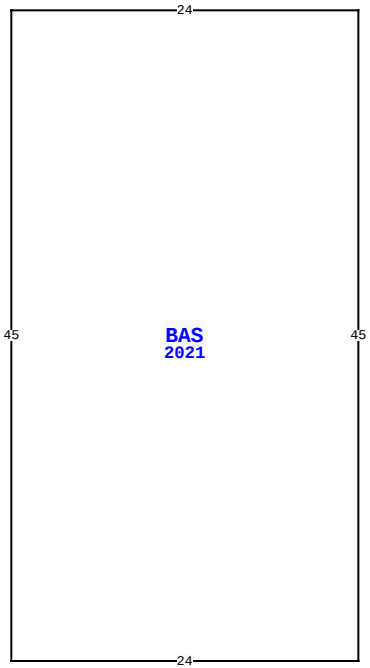

450671 W SR 200, CALLAHAN

BLD DATE		LGL DATE	
XF DATE		LAND DATE	
INC DATE		AG DATE	

NASSAU COUNTY PROPERTY

PAGE 2 of 2 6

VALUATION SUMMARY

VALUATION BY		STANDARD
Tax Group: 6	Tax Dist:	
BUILDING MARKET VALUE		365,131
TOTAL MARKET OB/XF VALUE		15,193
TOTAL LAND VALUE - MARKET		45,850
TOTAL MARKET VALUE		426,174
SOH/AGL Deduction		137,146
ASSESSED VALUE		289,028
TOTAL EXEMPTION VALUE	HX HB	50,000
BASE TAXABLE VALUE		239,028
TOTAL JUST VALUE		426,174
NCON VALUE		0
INCOME VALUE		
PREVIOUS YEAR MKT VALUE		363,318

PERMIT NUM	DESCRIPTION	AMT	ISSUED

SALES DATA

OFF RECORD Number	DATE	TYPE INST	Q / U	V / I	RSN CD	SALE PRICE
1831/0594	12/12/2012	WD	U	I	12	63,000
GRANTOR: FANNIE MAE						
GRANTEE: CARRIGG DAVID						
1785/0460	3/26/2012	CT	U	I	18	100
GRANTOR: CLERK OF COURT						
GRANTEE: FEDERAL NATIONAL MO						

BUILDING NOTES

BUILDING DIMENSIONS

BAS=[YR=2021] W24 S45 E24 N45$.

EXTRA FEATURES

LN	OB/XF CODE	DESCRIPTION	BLD	CAP	L	W	UNITS	UT	Adj R	ADJ UNIT PRICE	ORIG COND	YEAR ON	YEAR ACTUAL	Q	% COND	OB/XF MKT VALUE	NOTES

LAND DESCRIPTION

TOTAL OB/XF 0

LN	USE CODE	CLS	LAND USE DESCRIPTION	CAP	RD	LOC ZONE	FRONT	DEPTH	TOT LND UTS	UNIT TYPE	DT	DPTH FACT	% COND	TOT ADJ	UNIT PRICE	ADJ UNIT PRICE	LAND VALUE	OTHER ADJUSTMENTS AND NOTES	YEAR	DENSITY	DECL	FRZ	YR	CONSRV

REVIEW DATE 01/05/2022 BY KB Total Acres: 1.31 Total Land Value: 45,850 Market: 0 Agricultural: 0 Common: 45,850 PRINTED 08/02/2023 BY SYS