PT SEC 15 & 16-1N-25E
IN OR 2636/1268

WARREN WILLIAM
1284 MATENGO CIRCLE
ST JOHNS, FL 32259

2023

15-1N-25-0000-0001-0010

NASSAU COUNTY PROPERTY

BUILDING CHARACTERISTICS

ELEMENT	CD	CONSTRUCTION
Exterior Wall	19	COMMON BRK 90
Exterior Wall	05	AVERAGE 10
Roof Structur	03	GABLE/HIP 100
Roof Cover	03	COMP SHNGL 100
Interior Wall	05	DRYWALL 100
Interior Floo	14	CARPET 90
Interior Floo	07	CORK/VTILE 10
Air Condition	03	CENTRAL 100
Heating Type	04	AIR DUCTED 100
Bedrooms		2 100
Bathrooms		1 100
Frame	02	WOOD FRAME 100
Stories	1.	1. 100
Units		0 100
BUD8 Adjustme	06	DIST 1D 100
Occupancy	00	NONE 100
Quality	03	Quality Level 03
DOR CODE	0100	SINGLE FAMILY
MAP NUM		MKT AREA 08
NEIGHBORHOOD/LOC	8026.00	

AREA TYPE	TOTAL GROSS AREA	PCT OF BASE	TOT ADJ AREA	SUBAREA MARKET VALUE
BAS	1,423	100	1,423	98,066
FEP	120	80	96	6,616
FOP	48	30	14	965
UCP	400	20	80	5,513
UOP	80	20	16	1,103
UST	117	45	53	3,653
TOTALS	2,188		1,682	115,915

MARKET ADJUSTMENTS

TYPE	MDL	EFF. AREA	TOT ADJ PTS	EFF. BASE RATE	REPL. COST NEW	AYB	EYB	ECON	FNCT		NORM	% COND
0100	01	1,682	117.3000	105.86	178,057	1969	1969	0	0	0	34.90	65.10

1 SINGLE FAM – 0% - 2023 Heated Area: 1423 HX Base Yr

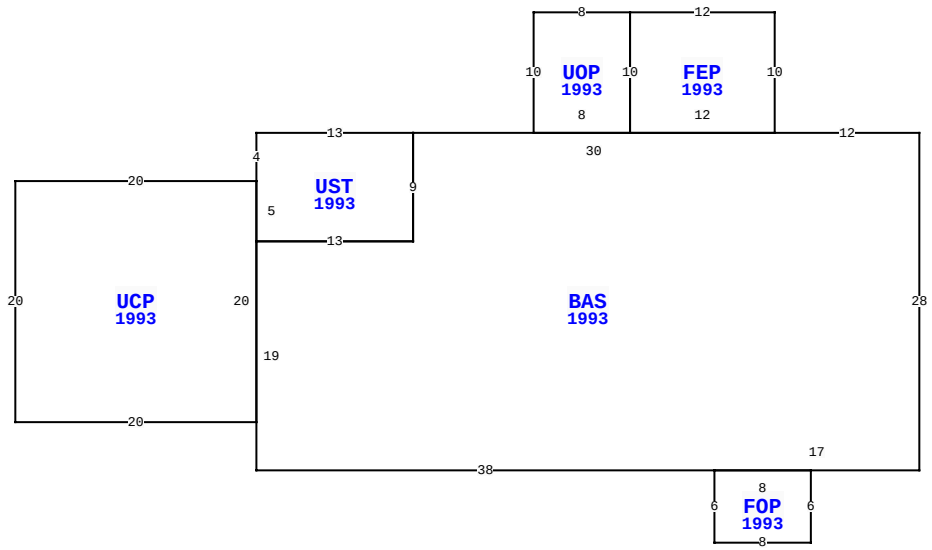

54058 HURST RD, CALLAHAN

BLD DATE		LGL DATE	
XF DATE		LAND DATE	
INC DATE		AG DATE	

VALUATION SUMMARY

VALUATION BY	STANDARD
Tax Group: 6	Tax Dist:
BUILDING MARKET VALUE	115,915
TOTAL MARKET OB/XF VALUE	6,712
TOTAL LAND VALUE - MARKET	86,100
TOTAL MARKET VALUE	208,727
SOH/AGL Deduction	0
ASSESSED VALUE	208,727
TOTAL EXEMPTION VALUE	0
BASE TAXABLE VALUE	208,727
TOTAL JUST VALUE	208,727
NCON VALUE	0
INCOME VALUE	
PREVIOUS YEAR MKT VALUE	185,783

PERMIT NUM	DESCRIPTION	AMT	ISSUED
MH971694	MH MOVE-ON	0	03/01/1997
M951009	H/AC	0	03/03/1995

SALES DATA

OFF RECORD Number	DATE	TYPE INST	Q / U	V / I	RSN CD	SALE PRICE
2636/1268	5/04/2023	WD	Q	I	01	125,000
GRANTOR: GORDON STEVEN VERNETT						
GRANTEE: WARREN WILLIAM						
2562/1197	4/05/2022	QC	U	I	11	100
GRANTOR: GORDON ELSIE M EST,CA						
GRANTEE: GORDON STEVEN VERNE						

BUILDING NOTES

BUILDING DIMENSIONS

BAS=[YR=1993] W12 FEP=[YR=1993] N10 W12 UOP=[YR=1993] W8 S10 E8 N10$ S10 E12 $ W30 UST=[YR=1993] W13 S4 UCP=[YR=1993] W20S20 E20 N20$ S5 E13 N9$ S9 W13 S19 E38 FOP=[YR=1993] S6 E8 N6 W8$ E17 N28$.

EXTRA FEATURES

LN	OB/XF CODE	DESCRIPTION	BLD	CAP	L	W	UNITS	UT	Adj R	ADJ UNIT PRICE	ORIG COND	YEAR ON	YEAR ACTUAL	Q	% COND	OB/XF MKT VALUE	NOTES
7	0510	GARAGE WD-	0	0	12	21	252.00	SF	35.00	35.00	100	1980	1980	3	20	1,764	
8	0940	SHEDS/PORT	0	0	0	0	510.00	SF	30.00	30.00	100	1980	1980	3	20	3,060	
9	0812	CONCRETE C	0	0	0	0	1,004.00	SF	4.00	4.00	100	1984	1984	3	47	1,888	

LAND DESCRIPTION

TOTAL OB/XF 6,712

LN	USE CODE	CLS	LAND USE DESCRIPTION	CAP	RD	LOC ZONE	FRONT	DEPTH	TOT LND UTS	UNIT TYPE	DT	DPTH FACT	% COND	TOT ADJ	UNIT PRICE	ADJ UNIT PRICE	LAND VALUE	OTHER ADJUSTMENTS AND NOTES	YEAR	DENSITY	DECL	FRZ	YR	CONSRV
1	000115	C	SFR ACRES	0	0006	OR	0.00	0.00	2.46	AC		1.00	1.00	1.00	35,000.00	35,000.00	86,100							

REVIEW DATE 04/14/2022 BY TWHS Total Acres: 2.46 Total Land Value: 86,100 Market: 0 Agricultural: 0 Common: 86,100 PRINTED 08/02/2023 BY SYS