LOTS 1199 & 1200 & PT OF ABND
29TH ST BY RES 1988-66 IN
OR 1905/868 (EX OR 1939/1079

DIPERNA TERENCE SR & APRIL D
32499 FOX DEN LN
CALLAHAN, FL 32011

2023

15-1N-24-2180-1199-0000

BUILDING CHARACTERISTICS

ELEMENT	CD	CONSTRUCTION
Exterior Wall	16	WD FR STUC 100
Roof Structur	08	IRREGULAR 100
Roof Cover	03	COMP SHNGL 100
Interior Wall	05	DRYWALL 100
Interior Floo	14	CARPET 70
Interior Floo	11	CLAY TILE 30
Air Condition	03	CENTRAL 100
Heating Type	04	AIR DUCTED 100
Bedrooms		3 100
Bathrooms		3 100
Frame	02	WOOD FRAME 100
Stories	0	0 100
Units		0 100
Occupancy	00	NONE 100
Quality	01	Quality Level 01
DOR CODE	5000	IMPROVED AG
MAP NUM		MKT AREA 08
NEIGHBORHOOD/LOC	8005.00	

AREA TYPE	TOTAL GROSS AREA	PCT OF BASE	TOT ADJ AREA	SUBAREA MARKET VALUE
BAS	3,058	100	3,058	303,507
FGR	374	55	206	20,445
FGR	778	55	428	42,479
FOP	77	30	23	2,283
FOP	426	30	128	12,704
FUS	736	100	736	73,049
TOTALS	5,449		4,579	454,467

MARKET ADJUSTMENTS

TYPE	MDL	EFF. AREA	TOT ADJ PTS	EFF. BASE RATE	REPL. COST NEW	AYB	EYB	ECON	FNCT		NORM	% COND
0900	01	4,579	86.6106	102.85	470,950	2015	2015	0	0	0	3.50	96.50

1 SNGL FAM – 100% - 2016 Heated Area: 3794 HX Base Yr 2016

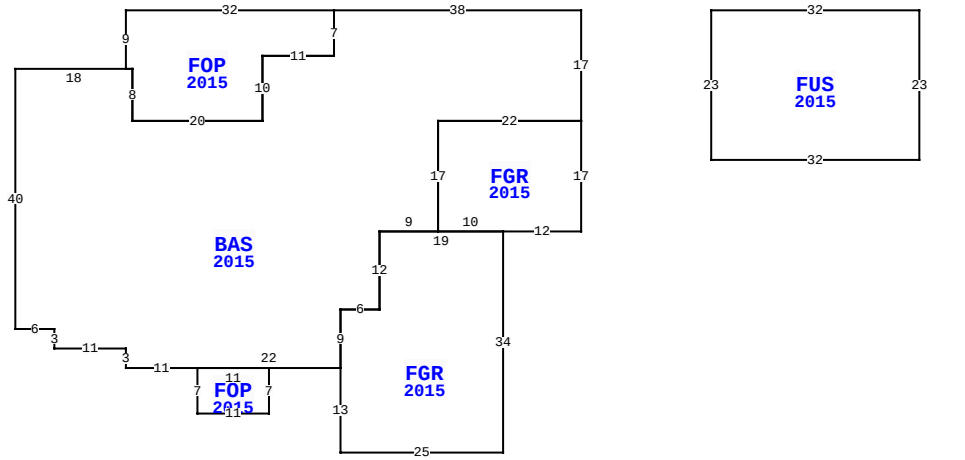

32499 FOX DEN LN, CALLAHAN

BLD DATE		LGL DATE	
XF DATE		LAND DATE	06/13/2023 MLU
INC DATE		AG DATE	

NASSAU COUNTY PROPERTY

PAGE 1 of 1 6

VALUATION SUMMARY

VALUATION BY		STANDARD
Tax Group: 6	Tax Dist:	
BUILDING MARKET VALUE		454,467
TOTAL MARKET OB/XF VALUE		99,592
TOTAL LAND VALUE - MARKET		261,750
TOTAL MARKET VALUE		619,573
SOH/AGL Deduction		126,354
ASSESSED VALUE		493,219
TOTAL EXEMPTION VALUE	HX HB	50,000
BASE TAXABLE VALUE		443,219
TOTAL JUST VALUE		815,809
NCON VALUE		0
INCOME VALUE		
PREVIOUS YEAR MKT VALUE		473,500

PERMIT NUM	DESCRIPTION	AMT	ISSUED
P164547	SWIM POOL	49,079	12/01/2016
B1429273	NEW CONSTR	482,627	09/01/2014
B1429287	XFOB	0	09/01/2014

SALES DATA

OFF RECORD Number	DATE	TYPE INST	Q / U	V / I	RSN CD	SALE PRICE
1905/0868	2/25/2014	WD	Q	V	02	124,000

GRANTOR: CRAWFORD RIDGE LLC

GRANTEE: DIPERNA TERENCE SR

BUILDING NOTES

BUILDING DIMENSIONS

BAS=[YR=2015] W38 FOP=[YR=2015] W32 S9 E1 S8 E20 N10 E11 N7$ S7 W11 S10 W20 N8 W18 S40 E6 S3 E11 S3 E11 FOP=[YR=2015] S7 E11 N7 W11$ E22 FGR=[YR=2015] S13 E25 N34 FGR=[YR=2015] E12 N17 W22 S17 E10$ W19 S12 W6 S9$ N9 E6 N12 E9 N17 E22 N17$ PTR=E20 FUS=[YR=2015] E32 S23 W32 N23$ W20$.

EXTRA FEATURES

LN	OB/XF CODE	DESCRIPTION	BLD	CAP	L	W	UNITS	UT	Adj R	ADJ UNIT PRICE	ORIG COND	YEAR ON	YEAR ACTUAL	Q	% COND	OB/XF MKT VALUE	NOTES
1	0510	GARAGE WD-	0	100	32	32	1,024.00	SF	35.00	35.00	100	2015	2015	3	81	29,030	
2	0811	CONCRETE B	0	100	32	24	768.00	SF	5.20	5.20	100	2015	2015	3	96	3,834	
3	0812	CONCRETE C	0	100	0	0	5,220.00	SF	4.00	4.00	100	2015	2015	3	96	20,045	
4	0855	CONC PAVER	0	100	0	0	1,014.00	SF	10.00	10.00	100	2017	2017	3	97	9,836	
5	0866	POOL FIBER	0	100	0	0	336.00	SF	72.00	72.00	100	2017	2017	3	82	19,837	
6	0911	SCRN RM A	0	100	50	24	1,080.00	SF	17.50	17.50	100	2019	2019	3	90	17,010	

LAND DESCRIPTION

TOTAL OB/XF 99,592

LN	USE CODE	CLS	LAND USE DESCRIPTION	CAP	RD	LOC ZONE	FRONT	DEPTH	TOT LND UTS	UNIT TYPE	DT	DPTH FACT	% COND	TOT ADJ	UNIT PRICE	ADJ UNIT PRICE	LAND VALUE	OTHER ADJUSTMENTS AND NOTES	YEAR	DENSITY	DECL	FRZ	YR	CONSRV
1	005000	C	RURAL HOME	100	0005	OR	0.00	0.00	2.00	AC		1.00	1.00	1.00	30,000.00	30,000.00	60,000							
2	005600	A	TIMBER 3 SI	0		OR	0.00	0.00	13.45	AC		1.00	1.00	1.00	410.00	410.00	5,514							
3	009910	M	MKT.VAL.AG	0			0.00	0.00	13.45	AC		1.00	1.00	1.00	15,000.00	15,000.00	201,750							

REVIEW DATE 05/20/2021 BY TWA Total Acres: 15.45 Total Land Value: 65,514 Market: 201,750 Agricultural: 5,514 Common: 60,000 PRINTED 08/02/2023 BY SYS