PT OR 1535/364

LOTT FRANCIS
4296 S FLETCHER AV
FERNANDINA BEACH, FL 32034

2023

13-2N-28-0000-0001-0010

BUILDING CHARACTERISTICS

ELEMENT	CD	CONSTRUCTION
Exterior Wall	17	CB STUCCO 100
Roof Structur	08	IRREGULAR 100
Roof Cover	11	SLATE 100
Interior Wall	05	DRYWALL 100
Interior Floo	11	CLAY TILE 80
Interior Floo	14	CARPET 20
Air Condition	03	CENTRAL 100
Heating Type	04	AIR DUCTED 100
Bedrooms		5 100
Bathrooms		5.5 100
Frame	02	WOOD FRAME 100
Stories	2.	2. 100
Units		0 100
Quality	03	Quality Level 03
DOR CODE	0100	SINGLE FAMILY
MAP NUM		MKT AREA 03
NEIGHBORHOOD/LOC	1053.00	

AREA TYPE	TOTAL GROSS AREA	PCT OF BASE	TOT ADJ AREA	SUBAREA MARKET VALUE
BAS	2,328	100	2,328	641,616
FGR	552	55	304	83,785
FGR	558	55	307	84,611
FOP	145	30	44	12,127
FOP	145	30	44	12,127
FOP	172	30	52	14,331
FOP	177	30	53	14,608
FOP	184	30	55	15,158
FOP	596	30	179	49,334
FOP	696	30	209	57,602
TOTALS	9,682		7,314	2,015,797

MARKET ADJUSTMENTS

TYPE	MDL	EFF. AREA	TOT ADJ PTS	EFF. BASE RATE	REPL. COST NEW	AYB	EYB	ECON	FNCT		NORM	% COND
0500	12	7,314	205.7510	293.20	2,144,465	2005	2010	0	0	0	6.00	94.00

1 SFR CUST – 100% - 2019 Heated Area: 5887 HX Base Yr 2019

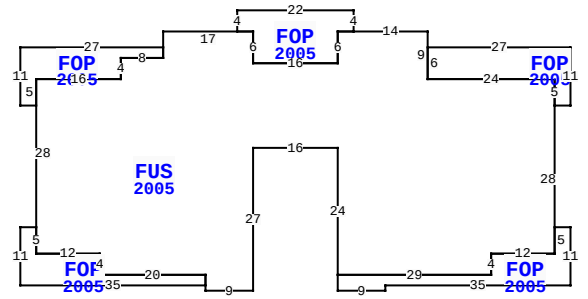

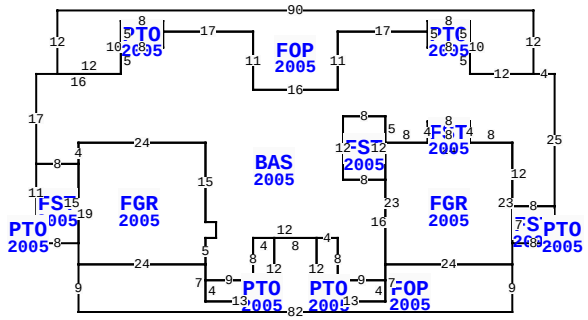

** This building has 21 Sub-Areas

BLD DATE	06/25/2007 KK	LGL DATE	
XF DATE		LAND DATE	
INC DATE		AG DATE	

4296 S FLETCHER AVE, FERNANDINA BEACH

NASSAU COUNTY PROPERTY

PAGE 1 of 2 8

VALUATION SUMMARY

VALUATION BY		STANDARD
Tax Group: 8	Tax Dist:	
BUILDING MARKET VALUE		2,015,797
TOTAL MARKET OB/XF VALUE		108,534
TOTAL LAND VALUE - MARKET		1,654,950
TOTAL MARKET VALUE		3,779,281
SOH/AGL Deduction		1,002,208
ASSESSED VALUE		2,777,073
TOTAL EXEMPTION VALUE	HX HB	50,000
BASE TAXABLE VALUE		2,727,073
TOTAL JUST VALUE		3,779,281
NCON VALUE		0
INCOME VALUE		
PREVIOUS YEAR MKT VALUE		3,700,015

PERMIT NUM	DESCRIPTION	AMT	ISSUED
R08093	REPAIR/RRF	62,275	08/01/2005
C0311818	CO ISSUED	818,407	10/01/2003
B0311818	NEW CONSTR	818,407	10/01/2003

SALES DATA

OFF RECORD Number	DATE	TYPE INST	Q / U	V / I	RSN CD	SALE PRICE
1535/0364	11/09/2007	WD	U	I	06	100
GRANTOR: AMELIA PROPERTY LLC						
GRANTEE: LOTT FRANCIS						
1082/1181	9/24/2002	WD	U	V	19	100
GRANTOR: LOTT PROPERTIES LTD						
GRANTEE: AMELIA PROPERTY LLC						

BUILDING NOTES

BUILDING DIMENSIONS

BAS=[YR=2005] W4FOP=[YR=2005] N12W90S12E12
N10E8S2E17S11E16N11E17N2E8S10 E12$W12N5PTO=[YR=2005]
N5W8S5E8$W8N3 W17S11W16N11W17PTO=[YR=2005] N2W8S5
E8N3$S3W8S5W16S17FST=[YR=2005] S11 PTO=[YR=2005]
W3S3E3N3$S4E8N15W8$E8 FGR=[YR=2005] S19E24N5E2N3W2N15W24S4
$N4E24S15E2S3W2S5FOP=[YR=2005] W24S9
E82N9W24S7W13N12W8S12W13N7$S3 PTO=[YR=2005]
S4E13N12W4S8W9$E9N8E12 PTO=[YR=2005] S12E13N4W9N8W4$E4S8E9 N3
FGR=[YR=2005] E24N23W24S23$N16 FST=[YR=2005] W8N12E8S12$
W8N12E8S5 E8 FST=[YR=2005] E8N4W8S4$ N4E8S4E8 S12
FST=[YR=2005] S7E8N1 PTO=[YR=2005] E3 N3W3S3$N6W8$E8N25$
PTR=N60 FOP=[YR=2005] E3N11W27S6E24 S5$ FUS=[YR=2005]

EXTRA FEATURES

LN	OB/XF CODE	DESCRIPTION	BLD	CAP	L	W	UNITS	UT	Adj R	ADJ UNIT PRICE	ORIG COND	YEAR ON	YEAR ACTUAL	Q	% COND	OB/XF MKT VALUE	NOTES
1	0810	CONCRETE A	0	100	22	5	110.00	SF	6.50	6.50	100	2005	2005	3	87	622	
2	0810	CONCRETE A	0	100	14	3	42.00	SF	6.50	6.50	100	2005	2005	3	87	238	
3	1100	VAC SYSTEM	0	100	0	0	1.00	UT	800.00	800.00	100	2005	2005	3	27	216	
4	0835	QUARY TILE	0	100	6	8	48.00	SF	10.00	10.00	100	2005	2005	3	87	418	
5	1123	CB 8"	0	100	0	0	684.00	SF	6.15	6.15	100	2005	2005	3	87	3,660	
6	0810	CONCRETE A	0	100	20	5	100.00	SF	6.50	6.50	100	2005	2005	3	87	566	
7	0855	CONC PAVER	0	100	0	0	372.00	SF	10.00	10.00	100	2005	2005	3	87	3,236	
8	0811	CONCRETE B	0	100	0	0	710.00	SF	5.20	5.20	100	2005	2005	3	87	3,212	
9	0415	BEACHWALK	0	100	0	0	1,160.00	SF	5.75	5.75	100	1997	1997	3	20	1,334	
10	0811	CONCRETE B	0	100	0	0	528.00	SF	5.20	5.20	100	2005	2005	3	87	2,389	

TOTAL OB/XF 15,891

LAND DESCRIPTION

LN	USE CODE	CLS	LAND USE DESCRIPTION	CAP	RD	LOC ZONE	FRONT	DEPTH	TOT LND UTS	UNIT TYPE	DT	DPTH FACT	% COND	TOT ADJ	UNIT PRICE	ADJ UNIT PRICE	LAND VALUE	OTHER ADJUSTMENTS AND NOTES	YEAR	DENSITY	DECL	FRZ	YR	CONSRV
1	000120	C	SFR OCN FT	100		RS-1	118.00	400.00	118.00	FF		1.00	1.00	0.85	16,500.00	14,025.00	1,654,950							

REVIEW DATE 03/15/2018 BY DJX Total Acres: 0.00 Total Land Value: 1,654,950 Market: 0 Agricultural: 0 Common: 1,654,950 PRINTED 08/02/2023 BY SYS

PT OR 1535/364

LOTT FRANCIS
4296 S FLETCHER AV
FERNANDINA BEACH, FL 32034

2023

13-2N-28-0000-0001-0010

BUILDING CHARACTERISTICS

ELEMENT	CD	CONSTRUCTION

DOR CODE	0100	SINGLE FAMILY	
MAP NUM		MKT AREA	03
NEIGHBORHOOD/LOC	1053.00		

AREA TYPE	TOTAL GROSS AREA	PCT OF BASE	TOT ADJ AREA	SUBAREA MARKET VALUE
TOTALS				

MARKET ADJUSTMENTS

TYPE	MDL	EFF. AREA	TOT ADJ PTS	EFF. BASE RATE	REPL. COST NEW	AYB	EYB	ECON	FNCT		NORM	% COND

BLD DATE	06/25/2007	KK
XF DATE		
INC DATE		
LGL DATE		
LAND DATE		
AG DATE		

NASSAU COUNTY PROPERTY

PAGE 2 of 2 8

VALUATION SUMMARY

VALUATION BY		STANDARD
Tax Group: 8	Tax Dist:	
BUILDING MARKET VALUE		2,015,797
TOTAL MARKET OB/XF VALUE		108,534
TOTAL LAND VALUE - MARKET		1,654,950
TOTAL MARKET VALUE		3,779,281
SOH/AGL Deduction		1,002,208
ASSESSED VALUE		2,777,073
TOTAL EXEMPTION VALUE	HX HB	50,000
BASE TAXABLE VALUE		2,727,073
TOTAL JUST VALUE		3,779,281
NCON VALUE		0
INCOME VALUE		
PREVIOUS YEAR MKT VALUE		3,700,015

PERMIT NUM	DESCRIPTION	AMT	ISSUED

SALES DATA

OFF RECORD Number	DATE	TYPE INST	Q / U	V / I	RSN CD	SALE PRICE
1535/0364	11/09/2007	WD	U	I	06	100
GRANTOR: AMELIA PROPERTY LLC						
GRANTEE: LOTT FRANCIS						
1082/1181	9/24/2002	WD	U	V	19	100
GRANTOR: LOTT PROPERTIES LTD						
GRANTEE: AMELIA PROPERTY LLC						

BUILDING NOTES

BUILDING DIMENSIONS

EXTRA FEATURES

LN	OB/XF CODE	DESCRIPTION	BLD	CAP	L	W	UNITS	UT	Adj R	ADJ UNIT PRICE	ORIG COND	YEAR ON	YEAR ACTUAL	Q	% COND	OB/XF MKT VALUE	NOTES
11	0855	CONC PAVER	0	100	0	0	4,006.00	SF	10.00	10.00	100	2005	2005	3	87	34,852	
12	0504	FP-ELECTRI	0	100	0	0	1.00	UT	2,000.00	2,000.00	100	2005	2005	3	90	1,800	
13	0410	ELEVATOR	0	100	0	0	1.00	UT	15,000.00	15,000.00	100	2005	2005	3	100	15,000	
14	0861	POOL GUNIT	0	100	0	0	720.00	SF	85.00	85.00	100	2006	2006	3	48	29,376	
15	0835	QUARY TILE	0	100	0	0	1,031.00	SF	10.00	10.00	100	2006	2006	3	88	9,073	
16	0600	SUMMER KIT	0	100	0	0	1.00	UT	5,000.00	5,000.00	100	2006	2006	3	31	1,550	
17	0871	POOL HTR R	0	100	0	0	1.00	UT	2,000.00	2,000.00	100	2006	2006	3	31	620	
18	0875	HOT TUB	0	100	0	0	1.00	UT	1,200.00	1,200.00	100	2006	2006	3	31	372	

LAND DESCRIPTION

TOTAL OB/XF 92,643

LN	USE CODE	CLS	LAND USE DESCRIPTION	CAP	RD	LOC ZONE	FRONT	DEPTH	TOT LND UTS	UNIT TYPE	DT	DPTH FACT	% COND	TOT ADJ	UNIT PRICE	ADJ UNIT PRICE	LAND VALUE	OTHER ADJUSTMENTS AND NOTES	YEAR	DENSITY	DECL	FRZ	YR	CONSRV

REVIEW DATE 03/15/2018 BY DJX Total Acres: 0.00 Total Land Value: 1,654,950 Market: 0 Agricultural: 0 Common: 1,654,950 PRINTED 08/02/2023 BY SYS