LOT 104
HAMPTON LAKES PHASE IV-A
OR 2343/796

HOLENCHICK ROBERT L JR & TINA CARTER
85577 FALL RIVER PKWY
FERNANDINA BEACH, FL 32034

2023

13-2N-27-0723-0104-0000

NASSAU COUNTY PROPERTY

BUILDING CHARACTERISTICS

ELEMENT	CD	CONSTRUCTION
Exterior Wall	31	HARDIE BRD 100
Roof Structur	08	IRREGULAR 100
Roof Cover	03	COMP SHNGL 100
Interior Wall	05	DRYWALL 100
Interior Floo	11	CLAY TILE 60
Interior Floo	14	CARPET 40
Air Condition	03	CENTRAL 100
Heating Type	04	AIR DUCTED 100
Bedrooms		3 100
Bathrooms		2.5 100
Frame	02	WOOD FRAME 100
Stories	1.	1. 100
Units		0 100
Occupancy	00	NONE 100
Quality	03	Quality Level 03

DOR CODE	0100	SINGLE FAMILY	
MAP NUM		MKT AREA	04
NEIGHBORHOOD/LOC	4077.00		

AREA TYPE	TOTAL GROSS AREA	PCT OF BASE	TOT ADJ AREA	SUBAREA MARKET VALUE
BAS	2,568	100	2,568	315,068
FOP	35	30	10	1,227
FSP	242	40	97	11,901
SFB	1,339	80	1,071	131,401
TOTALS	4,184		3,746	459,597

MARKET ADJUSTMENTS

TYPE	MDL	EFF. AREA	TOT ADJ PTS	EFF. BASE RATE	REPL. COST NEW	AYB	EYB	ECON	FNCT		NORM	% COND
0900	01	3,746	103.3200	122.69	459,597	2021	2021	0	0	0	0.00	100.00

1 SNGL FAM – 0% - 0 Heated Area: 3639 HX Base Yr

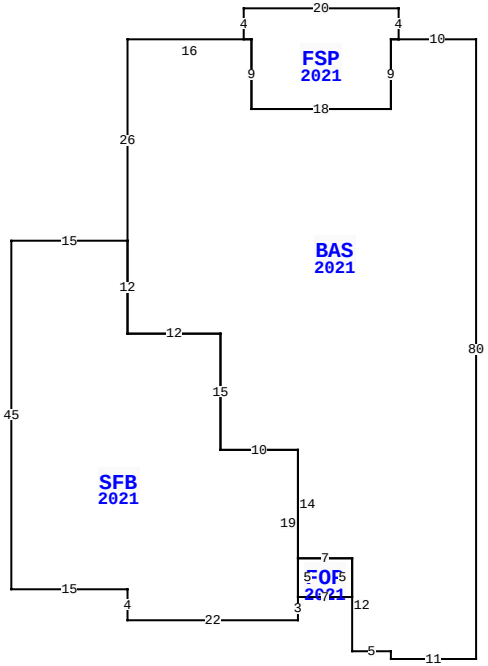

BLD DATE		LGL DATE	
XF DATE		LAND DATE	06/13/2023 MLU
INC DATE		AG DATE	

85577 FALL RIVER PKWY, FERNANDINA BEACH

VALUATION SUMMARY

VALUATION BY	STANDARD
Tax Group: 4	Tax Dist:
BUILDING MARKET VALUE	459,597
TOTAL MARKET OB/XF VALUE	5,780
TOTAL LAND VALUE - MARKET	75,000
TOTAL MARKET VALUE	540,377
SOH/AGL Deduction	62,950
ASSESSED VALUE	477,427
TOTAL EXEMPTION VALUE	0
BASE TAXABLE VALUE	477,427
TOTAL JUST VALUE	540,377
NCON VALUE	0
INCOME VALUE	
PREVIOUS YEAR MKT VALUE	434,025

PERMIT NUM	DESCRIPTION	AMT	ISSUED
21012310	CO ISSUED	0	09/15/2021
21000945	NEW CONSTR	391,061	03/03/2021

SALES DATA

OFF RECORD Number	DATE	TYPE INST	Q / U	V / I	RSN CD	SALE PRICE
2498/0668	9/16/2021	SW	Q	I	01	467,700
GRANTOR: RICHMOND AMERICAN HOM						
GRANTEE: HOLENCHICK ROBERT L						
2373/0856	7/02/2020	SW	Q	V	05	3,194,300
GRANTOR: AW VENTURE II LLC						
GRANTEE: RICHMOND AMERICAN H						

BUILDING NOTES

BUILDING DIMENSIONS

BAS=[YR=2021] W10 FSP=[YR=2021] N4 W20 S4 E1 S9 E18 N9 E1$ W1 S9 W18 N9 W16 S26 SFB=[YR=2021] W15 S45 E15 S4 E22 N3 FOP=[YR=2021] E7 N5 W7 S5$ N19 W10 N15 W12 N12$ S12 E12 S15 E10 S14 E7 S12 E5 S1 E11 N80$.

EXTRA FEATURES

LN	OB/XF CODE	DESCRIPTION	BLD	CAP	L	W	UNITS	UT	Adj R	ADJ UNIT PRICE	ORIG COND	YEAR ON	YEAR ACTUAL	Q	% COND	OB/XF MKT VALUE	NOTES
1	0812	CONCRETE C	0	0	0	0	1,445.00	SF	4.00	4.00	100	2021	2021	3	100	5,780	

LAND DESCRIPTION

TOTAL OB/XF 5,780

LN	USE CODE	CLS	LAND USE DESCRIPTION	CAP	RD	LOC ZONE	FRONT	DEPTH	TOT LND UTS	UNIT TYPE	DT	DPTH FACT	% COND	TOT ADJ	UNIT PRICE	ADJ UNIT PRICE	LAND VALUE	OTHER ADJUSTMENTS AND NOTES	YEAR	DENSITY	DECL	FRZ	YR	CONSRV
1	000100	C	SFR	0		PUD	0.00	0.00	1.00	LT		1.00	1.00	1.00	75,000.00	75,000.00	75,000							

REVIEW DATE 11/09/2021 BY NW Total Acres: 0.00 Total Land Value: 75,000 Market: 0 Agricultural: 0 Common: 75,000 PRINTED 08/02/2023 BY SYS