LOT 79
HAMPTON LAKES PHASE IV-B
OR 2320/460

LESCANEC JOHN FLOYD & DEBORAH MARIE
85313 FALL RIVER PARKWAY
FERNANDINA BEACH, FL 32034

2023

13-2N-27-0723-0079-0000

NASSAU COUNTY PROPERTY

BUILDING CHARACTERISTICS

ELEMENT	CD	CONSTRUCTION
Exterior Wall	31	HARDIE BRD 100
Roof Structur	08	IRREGULAR 100
Roof Cover	03	COMP SHNGL 100
Interior Wall	05	DRYWALL 100
Interior Floo	13	LVT/LAMNT 80
Interior Floo	14	CARPET 20
Air Condition	03	CENTRAL 100
Heating Type	04	AIR DUCTED 100
Bedrooms		3 100
Bathrooms		2 100
Frame	02	WOOD FRAME 100
Stories	1.	1. 100
Units		0 100
Occupancy	00	NONE 100
Quality	03	Quality Level 03
DOR CODE	0100	SINGLE FAMILY
MAP NUM		MKT AREA 04
NEIGHBORHOOD/LOC	4077.00	

AREA TYPE	TOTAL GROSS AREA	PCT OF BASE	TOT ADJ AREA	SUBAREA MARKET VALUE
BAS	2,568	100	2,568	307,492
FGR	1,339	55	736	88,129
FOP	35	30	10	1,197
FSP	242	40	97	11,615
TOTALS	4,184		3,411	408,433

MARKET ADJUSTMENTS

TYPE	MDL	EFF. AREA	TOT ADJ PTS	EFF. BASE RATE	REPL. COST NEW	AYB	EYB	ECON	FNCT		NORM	% COND
0900	01	3,411	100.8320	119.74	408,433	2022	2022	0	0	0	0.00	100.00

1 SNGL FAM – 100% - 2023 Heated Area: 2568 HX Base Yr 2023

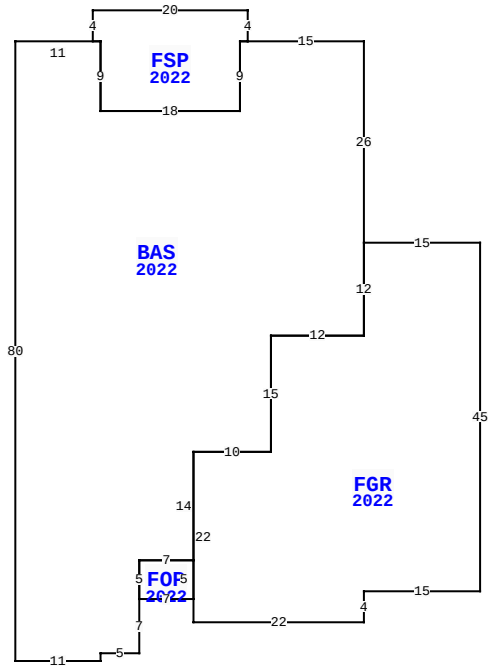

85313 FALL RIVER PKWY, FERNANDINA BEACH

BLD DATE		LGL DATE	
XF DATE		LAND DATE	06/13/2023 MLU
INC DATE		AG DATE	

VALUATION SUMMARY

VALUATION BY		STANDARD
Tax Group: 4	Tax Dist:	
BUILDING MARKET VALUE		408,433
TOTAL MARKET OB/XF VALUE		22,810
TOTAL LAND VALUE - MARKET		75,000
TOTAL MARKET VALUE		506,243
SOH/AGL Deduction		0
ASSESSED VALUE		506,243
TOTAL EXEMPTION VALUE	HX HB VX	55,000
BASE TAXABLE VALUE		451,243
TOTAL JUST VALUE		506,243
NCON VALUE		431,243
INCOME VALUE		
PREVIOUS YEAR MKT VALUE		65,000

PERMIT NUM	DESCRIPTION	AMT	ISSUED
22017083	CO ISSUED	0	11/17/2022
22002300	NEW CONSTR	471,011	02/10/2022

SALES DATA

OFF RECORD Number	DATE	TYPE INST	Q / U	V / I	RSN CD	SALE PRICE
2604/1546	11/18/2022	SW	Q	I	01	652,200
GRANTOR: RICHMOND AMERICAN HOM						
GRANTEE: LESCANEC JOHN FLOYD						
2464/0053	5/21/2021	SW	Q	V	05	5,279,000
GRANTOR: AW VENTURE II LLC						
GRANTEE: RICHMOND AMERICAN H						

BUILDING NOTES

BUILDING DIMENSIONS

FGR=[YR=2022] W15 BAS=[YR=2022] N26 W15 FSP=[YR=2022] N4 W20 S4 E1 S9 E18 N9 E1$ W1 S9 W18 N9 W11 S80 E11 N1 E5 N7 FOP=[YR=2022] E7 N5 W7 S5$ N5 E7 N14 E10 N15 E12 N12$ S12 W12 S15 W10 S22 E22 N4 E15 N45 $.

EXTRA FEATURES

LN	OB/XF CODE	DESCRIPTION	BLD	CAP	L	W	UNITS	UT	Adj R	ADJ UNIT PRICE	ORIG COND	YEAR ON	YEAR ACTUAL	Q	% COND	OB/XF MKT VALUE	NOTES
1	0855	CONC PAVER	0	100	0	0	1,477.00	SF	10.00	10.00	100	2022	2022	3	100	14,770	
2	0462	ST/AL FNC	0	100	0	0	744.00	SF	10.00	10.00	100	2022	2022	3	100	7,440	
3	0463	FENCE GATE	0	100	0	0	2.00	UT	300.00	300.00	100	2022	2022	3	100	600	

LAND DESCRIPTION

TOTAL OB/XF 22,810

LN	USE CODE	CLS	LAND USE DESCRIPTION	CAP	RD	LOC ZONE	FRONT	DEPTH	TOT LND UTS	UNIT TYPE	DT	DPTH FACT	% COND	TOT ADJ	UNIT PRICE	ADJ UNIT PRICE	LAND VALUE	OTHER ADJUSTMENTS AND NOTES	YEAR	DENSITY	DECL	FRZ	YR	CONSRV
1	000134	C	SFR POND	100		PUD	0.00	0.00	1.00	LT		1.00	1.00	1.00	75,000.00	75,000.00	75,000							

REVIEW DATE 02/08/2023 BY NW Total Acres: 0.00 Total Land Value: 75,000 Market: 0 Agricultural: 0 Common: 75,000 PRINTED 08/02/2023 BY SYS