LOT 91
HAMPTON LAKES PHASE 3
OR 2229/288

TURNER RYAN B & CATHERINE A
85365 FALLEN LEAF DR
FERNANDINA BEACH, FL 32034

2023

13-2N-27-0722-0091-0000

BUILDING CHARACTERISTICS

ELEMENT	CD	CONSTRUCTION
Exterior Wall	31	HARDIE BRD 100
Roof Structur	08	IRREGULAR 100
Roof Cover	03	COMP SHNGL 100
Interior Wall	05	DRYWALL 100
Interior Floo	13	LVT/LAMNT 60
Interior Floo	14	CARPET 40
Air Condition	03	CENTRAL 100
Heating Type	04	AIR DUCTED 100
Bedrooms		6 100
Bathrooms		3.5 100
Frame	02	WOOD FRAME 100
Stories	2.	2. 100
Units		0 100
Occupancy	00	NONE 100
Quality	03	Quality Level 03

DOR CODE	0100	SINGLE FAMILY	
MAP NUM		MKT AREA	04
NEIGHBORHOOD/LOC	4085.0100		

AREA TYPE	TOTAL GROSS AREA	PCT OF BASE	TOT ADJ AREA	SUBAREA MARKET VALUE
BAS	2,208	100	2,208	245,005
FGR	589	55	324	35,951
FOP	175	30	52	5,770
FOP	350	30	105	11,651
FUS	2,005	100	2,005	222,480
STR	36	10	4	444
TOTALS	5,363		4,698	521,301

MARKET ADJUSTMENTS

TYPE	MDL	EFF. AREA	TOT ADJ PTS	EFF. BASE RATE	REPL. COST NEW	AYB	EYB	ECON	FNCT		NORM	% COND
0900	01	4,698	93.9120	111.52	523,921	2020	2020	0	0	0	0.50	99.50

1 SNGL FAM – 100% - 2022 Heated Area: 4213 HX Base Yr 2022

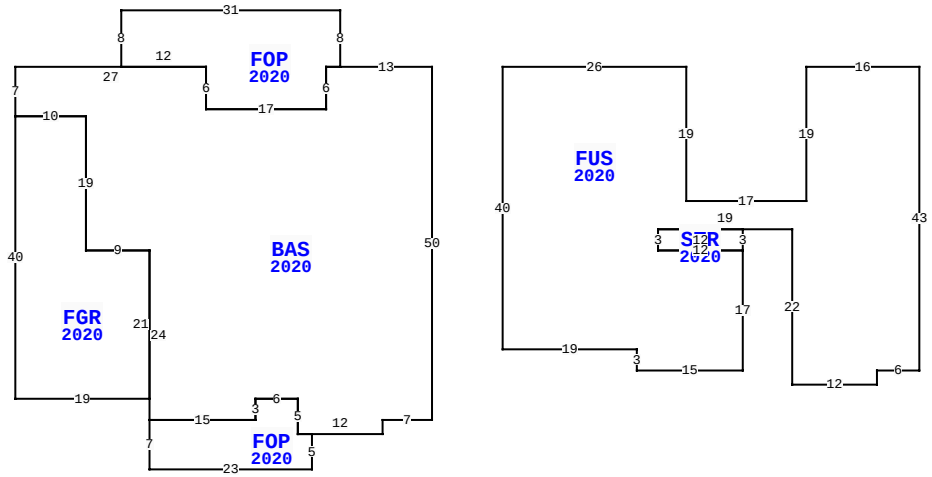

BLD DATE		LGL DATE	
XF DATE		LAND DATE	06/13/2023 MLU
INC DATE		AG DATE	

85365 FALLEN LEAF DR, FERNANDINA BEACH

NASSAU COUNTY PROPERTY

PAGE 1 of 1 4

VALUATION SUMMARY

VALUATION BY		STANDARD
Tax Group: 4	Tax Dist:	
BUILDING MARKET VALUE		521,301
TOTAL MARKET OB/XF VALUE		8,118
TOTAL LAND VALUE - MARKET		75,000
TOTAL MARKET VALUE		604,419
SOH/AGL Deduction		127,507
ASSESSED VALUE		476,912
TOTAL EXEMPTION VALUE	HX HB	50,000
BASE TAXABLE VALUE		426,912
TOTAL JUST VALUE		604,419
NCON VALUE		0
INCOME VALUE		
PREVIOUS YEAR MKT VALUE		486,532

PERMIT NUM	DESCRIPTION	AMT	ISSUED
20008983	CO ISSUED	0	09/28/2020
19009865	NEW CONSTR	556,198	02/01/2020

SALES DATA

OFF RECORD Number	DATE	TYPE INST	Q U	V I	RSN CD	SALE PRICE
2430/0349	1/29/2021	SW	Q	I	01	576,100
GRANTOR: AVH NORTH FLORIDA LLC						
GRANTEE: TURNER RYAN B & CAT						
2246/1096	12/31/2018	SW	U	V	37	5,700,000
GRANTOR: AW VENTURE I LLC ET A						
GRANTEE: AVH NORTH FLORIDA L						

BUILDING NOTES

BUILDING DIMENSIONS

BAS=[YR=2020] W13 FOP=[YR=2020] N8 W31 S8 E12 S6 E17 N6 E2$ W2 S6 W17 N6 W27 S7 FGR=[YR=2020] S40 E19 N21 W9 N19 W10$ E10 S19 E9 S24 FOP=[YR=2020] S7 E23 N5 W2 N5 W6 S3 W15$ E15 N3 E6 S5 E12 N2 E7 N50$ PTR=E10 FUS=[YR=2020] S40 E19 S3 E15 N17 STR=[YR=2020] W12 N3 E12 S3$ W12 N3 E19 S22 E12 N2 E6 N43 W16 S19 W17 N19 W26$ W10$.

EXTRA FEATURES

LN	OB/XF CODE	DESCRIPTION	BLD	CAP	L	W	UNITS	UT	Adj R	ADJ UNIT PRICE	ORIG COND	YEAR ON	YEAR ACTUAL	Q	% COND	OB/XF MKT VALUE	NOTES
1	0855	CONC PAVER	0	100	0	0	820.00	SF	10.00	10.00	100	2020	2020	3	99	8,118	

LAND DESCRIPTION

TOTAL OB/XF 8,118

LN	USE CODE	CLS	LAND USE DESCRIPTION	CAP	RD	LOC ZONE	FRONT	DEPTH	TOT LND UTS	UNIT TYPE	DT	DPTH FACT	% COND	TOT ADJ	UNIT PRICE	ADJ UNIT PRICE	LAND VALUE	OTHER ADJUSTMENTS AND NOTES	YEAR	DENSITY	DECL	FRZ	YR	CONSRV
1	000100	C	SFR	100			0.00	0.00	1.00	LT		1.00	1.00	1.00	75,000.00	75,000.00	75,000							

REVIEW DATE 08/01/2020 BY NW Total Acres: 0.00 Total Land Value: 75,000 Market: 0 Agricultural: 0 Common: 75,000 PRINTED 08/02/2023 BY SYS