LOT 89
HAMPTON LAKES PHASE 3
OR 2229/288

REPKO FAMILY TRUST/REPKO PETER A TRUSTEE
85463 FALLEN LEAF DR
FERNANDINA BEACH, FL 32034

2023

13-2N-27-0722-0089-0000

NASSAU COUNTY PROPERTY

BUILDING CHARACTERISTICS

ELEMENT	CD	CONSTRUCTION
Exterior Wall	31	HARDIE BRD 100
Roof Structur	08	IRREGULAR 100
Roof Cover	03	COMP SHNGL 100
Interior Wall	05	DRYWALL 100
Interior Floo	13	LVT/LAMNT 100
Air Condition	03	CENTRAL 100
Heating Type	04	AIR DUCTED 100
Bedrooms		5 100
Bathrooms		3.5 100
Frame	02	WOOD FRAME 100
Stories	1.	1. 100
Units		0 100
Occupancy	00	NONE 100
Quality	03	Quality Level 03

DOR CODE 0100 SINGLE FAMILY
MAP NUM | MKT AREA 04
NEIGHBORHOOD/LOC 4085.0100

AREA TYPE	TOTAL GROSS AREA	PCT OF BASE	TOT ADJ AREA	SUBAREA MARKET VALUE
BAS	3,300	100	3,300	395,010
FGR	870	55	478	57,217
FOP	238	30	71	8,499
FOP	290	30	87	10,414
TOTALS	4,698		3,936	471,139

MARKET ADJUSTMENTS

TYPE	MDL	EFF. AREA	TOT ADJ PTS	EFF. BASE RATE	REPL. COST NEW	AYB	EYB	ECON	FNCT		NORM	% COND
0900	01	3,936	100.8000	119.70	471,139	2021	2021	0	0	0	0.00	100.00

1 SNGL FAM – 100% - 2022 Heated Area: 3300 HX Base Yr 2022

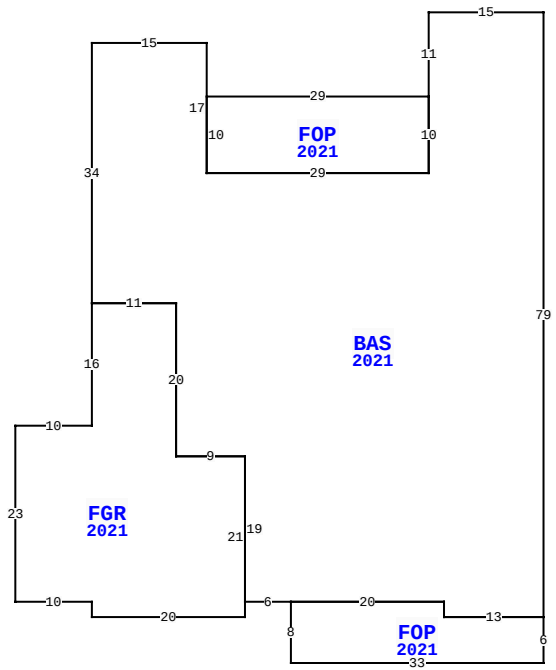

85463 FALLEN LEAF DR, FERNANDINA BEACH

BLD DATE		LGL DATE	
XF DATE		LAND DATE	06/13/2023 MLU
INC DATE		AG DATE	

VALUATION SUMMARY

VALUATION BY		STANDARD
Tax Group: 4	Tax Dist:	
BUILDING MARKET VALUE		471,139
TOTAL MARKET OB/XF VALUE		17,780
TOTAL LAND VALUE - MARKET		75,000
TOTAL MARKET VALUE		563,919
SOH/AGL Deduction		100,622
ASSESSED VALUE		463,297
TOTAL EXEMPTION VALUE	HX HB	50,000
BASE TAXABLE VALUE		413,297
TOTAL JUST VALUE		563,919
NCON VALUE		0
INCOME VALUE		
PREVIOUS YEAR MKT VALUE		449,803

PERMIT NUM	DESCRIPTION	AMT	ISSUED
21001919	CO ISSUED	0	02/18/2021
20008438	NEW CONSTR	441,817	09/15/2020

SALES DATA

OFF RECORD Number	DATE	TYPE INST	Q U	V I	RSN CD	SALE PRICE
2436/0371	2/22/2021	SW	Q	I	01	506,300
GRANTOR: AVH NORTH FLORIDA LLC						
GRANTEE: REPKO FAMILY TRUST						
2246/1096	12/31/2018	SW	U	V	37	5,700,000
GRANTOR: AW VENTURE I LLC ET A						
GRANTEE: AVH NORTH FLORIDA L						

BUILDING NOTES

BUILDING DIMENSIONS

BAS=[YR=2021] W15 S11 FOP=[YR=2021] W29 S10 E29 N10$ S10 W29 N17 W15 S34 FGR=[YR=2021] S16 W10 S23 E10 S2 E20 N21 W9 N20 W11$ E11 S20 E9 S19 E6 FOP=[YR=2021] S8 E33 N6 W13 N2 W20$ E20 S2 E13 N79$.

EXTRA FEATURES

LN	OB/XF CODE	DESCRIPTION	BLD	CAP	L	W	UNITS	UT	Adj R	ADJ UNIT PRICE	ORIG COND	YEAR ON	YEAR ACTUAL	Q	% COND	OB/XF MKT VALUE	NOTES
1	0855	CONC PAVER	0	100	0	0	1,343.00	SF	10.00	10.00	100	2021	2021	3	100	13,430	
2	0855	CONC PAVER	0	100	0	0	435.00	SF	10.00	10.00	100	2021	2021	3	100	4,350	

LAND DESCRIPTION

TOTAL OB/XF 17,780

LN	USE CODE	CLS	LAND USE DESCRIPTION	CAP	RD	LOC ZONE	FRONT	DEPTH	TOT LND UTS	UNIT TYPE	DT	DPTH FACT	% COND	TOT ADJ	UNIT PRICE	ADJ UNIT PRICE	LAND VALUE	OTHER ADJUSTMENTS AND NOTES	YEAR	DENSITY	DECL	FRZ	YR	CONSRV
1	000135	C	SFR CNSVTN	100			0.00	0.00	1.00	LT		1.00	1.00	1.00	75,000.00	75,000.00	75,000							

REVIEW DATE 10/04/2021 BY NW Total Acres: 0.00 Total Land Value: 75,000 Market: 0 Agricultural: 0 Common: 75,000 PRINTED 08/02/2023 BY SYS