LOT 111
IN OR 2209/1090
HAMPTON LAKES #1 PB 7/252

CAMPBELL TIWANA & MALCOLM
85368 CHERRY CREEK DR
FERNANDINA BEACH, FL 32034

2023

13-2N-27-0720-0111-0000

BUILDING CHARACTERISTICS

ELEMENT	CD	CONSTRUCTION
Exterior Wall	16	WD FR STUC 90
Exterior Wall	20	FACE BRICK 10
Roof Structur	08	IRREGULAR 100
Roof Cover	03	COMP SHNGL 100
Interior Wall	05	DRYWALL 100
Interior Floo	11	CLAY TILE 50
Interior Floo	14	CARPET 50
Air Condition	03	CENTRAL 100
Heating Type	04	AIR DUCTED 100
Bedrooms		4 100
Bathrooms		3.5 100
Frame	02	WOOD FRAME 100
Stories	2.	2. 100
Units		0 100
Occupancy	00	NONE 100
Quality	03	Quality Level 03
DOR CODE	0100	SINGLE FAMILY
MAP NUM		MKT AREA 04
NEIGHBORHOOD/LOC	4077.00	

AREA TYPE	TOTAL GROSS AREA	PCT OF BASE	TOT ADJ AREA	SUBAREA MARKET VALUE
BAS	2,628	100	2,628	318,606
FGR	713	55	392	47,524
FOP	276	30	83	10,062
FSP	348	40	139	16,852
FST	24	55	13	1,576
FUS	712	100	712	86,319
STR	56	10	6	727
TOTALS	4,757		3,973	481,668

MARKET ADJUSTMENTS

TYPE	MDL	EFF. AREA	TOT ADJ PTS	EFF. BASE RATE	REPL. COST NEW	AYB	EYB	ECON	FNCT		NORM	% COND
0900	01	3,973	104.8500	124.51	494,678	2017	2017	0	0	0	2.63	97.37

1 SNGL FAM – 100% - 2019 Heated Area: 3340 HX Base Yr 2019

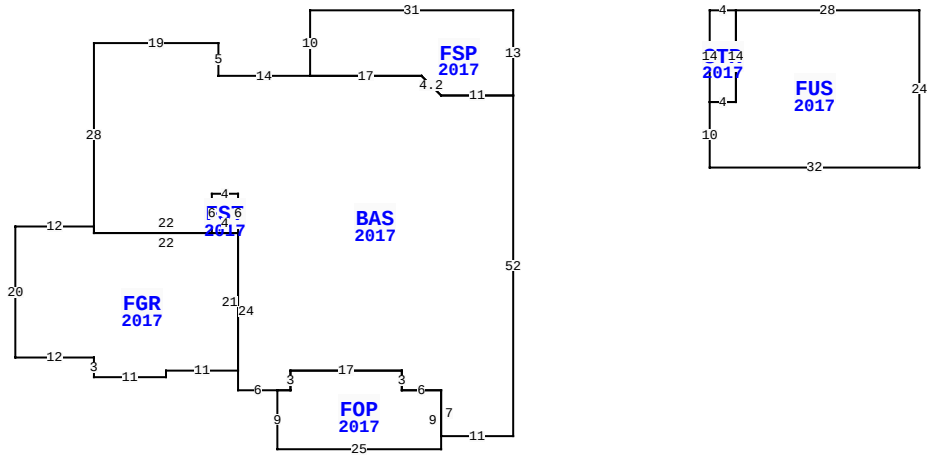

85368 CHERRY CREEK DR, FERNANDINA BEACH

BLD DATE		LGL DATE	
XF DATE		LAND DATE	06/13/2023 MLU
INC DATE		AG DATE	

NASSAU COUNTY PROPERTY

PAGE 1 of 1 4

VALUATION SUMMARY

VALUATION BY		STANDARD
Tax Group: 4	Tax Dist:	
BUILDING MARKET VALUE		481,668
TOTAL MARKET OB/XF VALUE		82,382
TOTAL LAND VALUE - MARKET		75,000
TOTAL MARKET VALUE		639,050
SOH/AGL Deduction		163,315
ASSESSED VALUE		475,735
TOTAL EXEMPTION VALUE	HX HB VX	55,000
BASE TAXABLE VALUE		420,735
TOTAL JUST VALUE		639,050
NCON VALUE		99,745
INCOME VALUE		
PREVIOUS YEAR MKT VALUE		451,094

PERMIT NUM	DESCRIPTION	AMT	ISSUED
22007886	ADDITION	15,038	05/20/2022
21015772	SWIM POOL	74,132	11/15/2021
17002125	CO ISSUED	0	03/16/2017
B1632578	NEW CONSTR	422,881	06/29/2016

SALES DATA

OFF RECORD Number	DATE	TYPE INST	Q / U	V / I	RSN CD	SALE PRICE
2209/1090	7/09/2018	WD	Q	I	01	395,000
GRANTOR: TZETZO STEVE						
GRANTEE: CAMPBELL TIWANA & M						
2166/1307	12/22/2017	SW	Q	I	01	417,000
GRANTOR: AVATAR PROPERTIES INC						
GRANTEE: TZETZO STEVE						

BUILDING NOTES

BUILDING DIMENSIONS

FSP=[YR=2017] W31 S10 BAS=[YR=2017] W14 N5 W19 S28 FGR=[YR=2017] W12 S20 E12 S3 E11 N1 E11 N21 FST=[YR=2017] N6 W4 S6 E4$ W22 N1$ S1 E22 S24 E6 FOP=[YR=2017] S9 E25 N9 W6 N3 W17 S3 W2$ E2 N3 E17 S3 E6 S7 E11 N52 W11 U3 L3 W17$ E17 D3 R3 E11 N13$ PTR=[YR=2017] E30 STR=[YR=2017] E4 FUS=[YR=2017] E28 S24 W32 N10 E4 N14 $ S14 W4 N14$ W30$.

EXTRA FEATURES

LN	OB/XF CODE	DESCRIPTION	BLD	CAP	L	W	UNITS	UT	Adj R	ADJ UNIT PRICE	ORIG COND	YEAR ON	YEAR ACTUAL	Q	% COND	OB/XF MKT VALUE	NOTES
1	0812	CONCRETE C	0	100	0	0	1,297.00	SF	4.00	4.00	100	2017	2017	3	97	5,032	
2	0861	POOL GUNIT	0	100	28	14	392.00	SF	85.00	85.00	100	2022	2022	3	100	33,320	
3	0871	POOL HTR R	0	100	0	0	1.00	UT	2,000.00	2,000.00	100	2022	2022	3	100	2,000	
4	0911	SCRN RM A	0	100	0	0	1,300.00	SF	17.50	17.50	100	2022	2022	3	100	22,750	
5	0855	CONC PAVER	0	100	0	0	908.00	SF	10.00	10.00	100	2022	2022	3	100	9,080	
6	0462	ST/AL FNC	0	100	0	0	960.00	SF	10.00	10.00	100	2022	2022	3	100	9,600	
7	0463	FENCE GATE	0	100	0	0	2.00	UT	300.00	300.00	100	2022	2022	3	100	600	

LAND DESCRIPTION

TOTAL OB/XF 82,382

LN	USE CODE	CLS	LAND USE DESCRIPTION	CAP	RD	LOC ZONE	FRONT	DEPTH	TOT LND UTS	UNIT TYPE	DT	DPTH FACT	% COND	TOT ADJ	UNIT PRICE	ADJ UNIT PRICE	LAND VALUE	OTHER ADJUSTMENTS AND NOTES	YEAR	DENSITY	DECL	FRZ	YR	CONSRV
1	000135	C	SFR CNSVTN	100			0.00	0.00	1.00	LT		1.00	1.00	1.00	75,000.00	75,000.00	75,000							

REVIEW DATE 11/01/2022 BY NW Total Acres: 0.00 Total Land Value: 75,000 Market: 0 Agricultural: 0 Common: 75,000 PRINTED 08/02/2023 BY SYS