LOT 100
IN OR 2190/1121
HAMPTON LAKES #1 PB 7/252

NATALONI FAMILY TRUST/NATALONI ROBERT C TRUSTEE
85237 CHERRY CREEK DR
FERNANDINA BEACH, FL 32034

2023

13-2N-27-0720-0100-0000

NASSAU COUNTY PROPERTY

BUILDING CHARACTERISTICS

ELEMENT	CD	CONSTRUCTION
Exterior Wall	16	WD FR STUC 80
Exterior Wall	31	HARDIE BRD 20
Roof Structur	08	IRREGULAR 100
Roof Cover	03	COMP SHNGL 100
Interior Wall	05	DRYWALL 100
Interior Floo	14	CARPET 60
Interior Floo	11	CLAY TILE 40
Air Condition	03	CENTRAL 100
Heating Type	04	AIR DUCTED 100
Bedrooms		4 100
Bathrooms		3 100
Frame	02	WOOD FRAME 100
Stories	2.	2. 100
Units		0 100
Occupancy	00	NONE 100
Quality	03	Quality Level 03
DOR CODE	0100	SINGLE FAMILY
MAP NUM		MKT AREA 04
NEIGHBORHOOD/LOC	4077.00	

AREA TYPE	TOTAL GROSS AREA	PCT OF BASE	TOT ADJ AREA	SUBAREA MARKET VALUE
BAS	2,088	100	2,088	232,305
FGR	820	55	451	50,177
FOP	126	30	38	4,228
FSP	346	40	138	15,353
FUS	2,162	100	2,162	240,538
STR	64	10	6	667
TOTALS	5,606		4,883	543,269

MARKET ADJUSTMENTS

TYPE	MDL	EFF. AREA	TOT ADJ PTS	EFF. BASE RATE	REPL. COST NEW	AYB	EYB	ECON	FNCT		NORM	% COND
0900	01	4,883	96.4920	114.58	559,494	2016	2016	0	0	0	2.90	97.10

1 SNGL FAM – 100% - 2018 Heated Area: 4250 HX Base Yr 2018

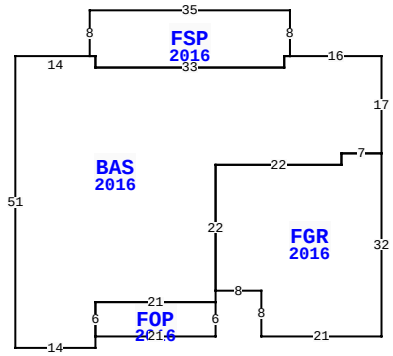

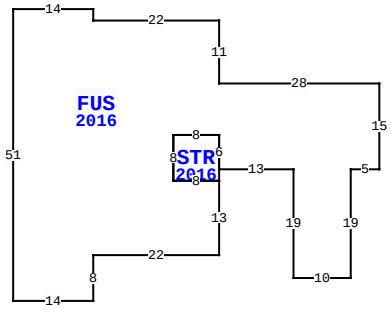

85237 CHERRY CREEK DR, FERNANDINA BEACH

BLD DATE		LGL DATE	
XF DATE		LAND DATE	06/13/2023 MLU
INC DATE		AG DATE	

VALUATION SUMMARY

VALUATION BY		STANDARD
Tax Group: 4	Tax Dist:	
BUILDING MARKET VALUE		543,269
TOTAL MARKET OB/XF VALUE		11,707
TOTAL LAND VALUE - MARKET		75,000
TOTAL MARKET VALUE		629,976
SOH/AGL Deduction		200,691
ASSESSED VALUE		429,285
TOTAL EXEMPTION VALUE	HX HB	50,000
BASE TAXABLE VALUE		379,285
TOTAL JUST VALUE		629,976
NCON VALUE		0
INCOME VALUE		
PREVIOUS YEAR MKT VALUE		508,386

PERMIT NUM	DESCRIPTION	AMT	ISSUED
230005182	SCRN ENCL	16,885	04/21/2023
B1632372	CO ISSUED	0	11/30/2016
B1632372	NEW CONSTR	506,641	05/01/2016

SALES DATA

OFF RECORD Number	DATE	TYPE INST	Q / U	V / I	RSN CD	SALE PRICE
2190/1121	11/20/2017	WD	U	I	11	100
GRANTOR: NATALONI ROBERT C & R						
GRANTEE: NATALONI FAMILY TRU						
2088/0181	11/30/2016	WD	Q	I	01	507,200
GRANTOR: AVATAR PROPERTIES INC						
GRANTEE: NATALONI ROBERT C &						

BUILDING NOTES

BUILDING DIMENSIONS

BAS=[YR=2016] W16 FSP=[YR=2016] N8 W35 S8 E1 S2 E33 N2 E1$ W1 S2 W33 N2 W14 S51 E14 N2 FOP=[YR=2016] E21 N6 W21 S6$ N6 E21 N2 FGR=[YR=2016] E8 S8 E21 N32 W7 S2 W22 S22$ N22 E22 N2 E7 N17$ PTR=[YR=2016] E30 FUS=[YR=2016] E14 S2 E22 S11 E28 S15 W5 S19 W10 N19 W13 STR=[YR=2016] S2 W8 N8 E8 S6$ N6 W8 S8 E8 S13 W22 S8 W14 N51$ W30$.

EXTRA FEATURES

LN	OB/XF CODE	DESCRIPTION	BLD	CAP	L	W	UNITS	UT	Adj R	ADJ UNIT PRICE	ORIG COND	YEAR ON	YEAR ACTUAL	Q	% COND	OB/XF MKT VALUE	NOTES
1	0811	CONCRETE B	0	100	0	0	1,594.00	SF	5.20	5.20	100	2016	2016	3	97	8,040	
2	0855	CONC PAVER	0	100	0	0	227.00	SF	10.00	10.00	100	2016	2016	3	97	2,202	
3	0835	QUARY TILE	0	100	0	0	151.00	SF	10.00	10.00	100	2016	2016	3	97	1,465	

LAND DESCRIPTION

TOTAL OB/XF 11,707

LN	USE CODE	CLS	LAND USE DESCRIPTION	CAP	RD	LOC ZONE	FRONT	DEPTH	TOT LND UTS	UNIT TYPE	DT	DPTH FACT	% COND	TOT ADJ	UNIT PRICE	ADJ UNIT PRICE	LAND VALUE	OTHER ADJUSTMENTS AND NOTES	YEAR	DENSITY	DECL	FRZ	YR	CONSRV
1	000133	C	SFR LAKE	100			0.00	0.00	1.00	LT		1.00	1.00	1.00	75,000.00	75,000.00	75,000							

REVIEW DATE 07/20/2023 BY NW Total Acres: 0.00 Total Land Value: 75,000 Market: 0 Agricultural: 0 Common: 75,000 PRINTED 08/02/2023 BY SYS