LOT 39
IN OR 1536/1770
HAMPTON LAKES #1 PB 7/252

FULLER SHELTON J
85047 APOKA COURT
FERNANDINA BEACH, FL 32034

2023

13-2N-27-0720-0039-0000

BUILDING CHARACTERISTICS

ELEMENT	CD	CONSTRUCTION
Exterior Wall	16	WD FR STUC 100
Roof Structur	08	IRREGULAR 100
Roof Cover	03	COMP SHNGL 100
Interior Wall	05	DRYWALL 100
Interior Floo	11	CLAY TILE 50
Interior Floo	14	CARPET 50
Air Condition	03	CENTRAL 100
Heating Type	04	AIR DUCTED 100
Bedrooms		4 100
Bathrooms		3 100
Frame	02	WOOD FRAME 100
Stories	1.5	1.5 100
Units		0 100
Occupancy	00	NONE 100
Quality	03	Quality Level 03
DOR CODE	0100	SINGLE FAMILY
MAP NUM		MKT AREA 04
NEIGHBORHOOD/LOC	4077.00	

AREA TYPE	TOTAL GROSS AREA	PCT OF BASE	TOT ADJ AREA	SUBAREA MARKET VALUE
BAS	1,947	100	1,947	243,294
FGR	471	55	259	32,364
FOP	31	30	9	1,125
FOP	120	30	36	4,498
FUS	392	100	392	48,983
USP	266	30	80	9,996
TOTALS	3,227		2,723	340,261

MARKET ADJUSTMENTS

TYPE	MDL	EFF. AREA	TOT ADJ PTS	EFF. BASE RATE	REPL. COST NEW	AYB	EYB	ECON	FNCT		NORM	% COND
0900	01	2,723	113.7600	135.09	367,850	2007	2007	0	0	0	7.50	92.50

1 SNGL FAM – 100% - 2008 Heated Area: 2339 HX Base Yr 2008

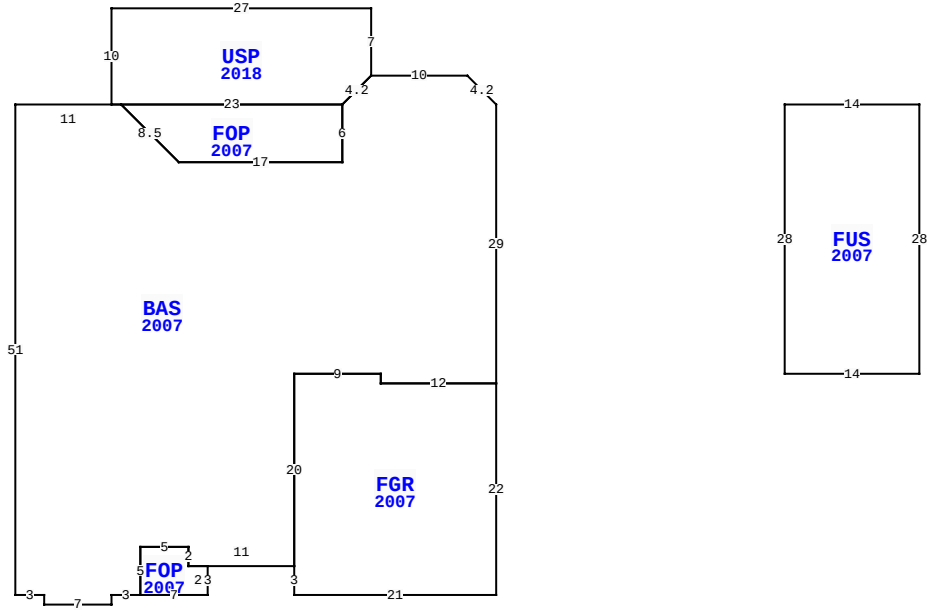

85047 APOKA CT, FERNANDINA BEACH

BLD DATE	10/12/2007 RK	LGL DATE	
XF DATE	10/12/2007 RK	LAND DATE	06/13/2023 MLU
INC DATE		AG DATE	

NASSAU COUNTY PROPERTY

PAGE 1 of 1 4

VALUATION SUMMARY

VALUATION BY		STANDARD
Tax Group: 4	Tax Dist:	
BUILDING MARKET VALUE		340,261
TOTAL MARKET OB/XF VALUE		5,062
TOTAL LAND VALUE - MARKET		75,000
TOTAL MARKET VALUE		420,323
SOH/AGL Deduction		201,051
ASSESSED VALUE		219,272
TOTAL EXEMPTION VALUE	HX HB VX	55,000
BASE TAXABLE VALUE		164,272
TOTAL JUST VALUE		420,323
NCON VALUE		0
INCOME VALUE		
PREVIOUS YEAR MKT VALUE		341,354

PERMIT NUM	DESCRIPTION	AMT	ISSUED
17007590	ADDITION	5,186	08/22/2017
E19374	ELEC OTHER	2,000	06/01/2007
M13002	MECH OTHER	0	06/01/2007
C19958	CO ISSUED	0	05/01/2007
B19958	NEW CONSTR	210,400	05/01/2007
R10396	REPAIR/RRF	4,933	05/01/2007

SALES DATA

OFF RECORD Number	DATE	TYPE INST	Q / U	V / I	RSN CD	SALE PRICE
1536/1770	11/21/2007	WD	Q	I		254,300

GRANTOR: WOODSIDE AMELIA LAKES

GRANTEE: FULLER SHELTON J

BUILDING NOTES

BUILDING DIMENSIONS

BAS=[YR=2007] U3 L3 W10 USP=[YR=2018] N7 W27 S10 E1 FOP=[YR=2007] D6 R6 E17 N6 W23$ E23 U3 R3 $ D3 L3 S6 W17 U6 L6 W11 S51 E3 S1 E7 N1 E3 FOP=[YR=2007] E7 N3 W2 N2 W5 S5 $ N5 E5 S2 E11 FGR=[YR=2007] S3 E21 N22 W12 N1 W9 S20 $ N20 E9 S1 E12 N29 $ PTR= E30 FUS=[YR=2007] E14 S28 W14 N28 $ W30 $.

EXTRA FEATURES

LN	OB/XF CODE	DESCRIPTION	BLD	CAP	L	W	UNITS	UT	Adj R	ADJ UNIT PRICE	ORIG COND	YEAR ON	YEAR ACTUAL	Q	% COND	OB/XF MKT VALUE	NOTES
1	0812	CONCRETE C	0	100	0	0	1,422.00	SF	4.00	4.00	100	2007	2007	3	89	5,062	

LAND DESCRIPTION

TOTAL OB/XF 5,062

LN	USE CODE	CLS	LAND USE DESCRIPTION	CAP	RD	LOC ZONE	FRONT	DEPTH	TOT LND UTS	UNIT TYPE	DT	DPTH FACT	% COND	TOT ADJ	UNIT PRICE	ADJ UNIT PRICE	LAND VALUE	OTHER ADJUSTMENTS AND NOTES	YEAR	DENSITY	DECL	FRZ	YR	CONSRV
1	000135	C	SFR CNSVTN	100			0.00	0.00	1.00	LT		1.00	1.00	1.00	75,000.00	75,000.00	75,000							

REVIEW DATE 04/09/2019 BY TW Total Acres: 0.00 Total Land Value: 75,000 Market: 0 Agricultural: 0 Common: 75,000 PRINTED 08/02/2023 BY SYS