LOT 13
NASSAU LANDING SUB PB4/84 & 85

CICERO JOSEPH
75055 EDWARDS ROAD
YULEE, FL 32097

2023

13-2N-26-4200-0013-0000

NASSAU COUNTY PROPERTY

BUILDING CHARACTERISTICS

ELEMENT	CD	CONSTRUCTION
Exterior Wall	20	FACE BRICK 60
Exterior Wall	12	CEDAR 40
Roof Structur	03	GABLE/HIP 100
Roof Cover	03	COMP SHNGL 100
Interior Wall	05	DRYWALL 100
Interior Floo	13	LVT/LAMNT 60
Interior Floo	14	CARPET 40
Air Condition	03	CENTRAL 100
Heating Type	04	AIR DUCTED 100
Bedrooms		3 100
Bathrooms		2.5 100
Frame	02	WOOD FRAME 100
Stories	2.	2. 100
Units		0 100
Occupancy	00	NONE 100
Quality	05	Quality Level 05
DOR CODE	0100	SINGLE FAMILY
MAP NUM		MKT AREA 05
NEIGHBORHOOD/LOC	5001.00	

AREA TYPE	TOTAL GROSS AREA	PCT OF BASE	TOT ADJ AREA	SUBAREA MARKET VALUE
BAS	1,103	100	1,103	141,173
FSP	192	40	77	9,856
FSP	384	40	154	19,710
FUS	656	100	656	83,962
PTO	40	5	2	256
UGR	782	45	352	45,052
UOP	36	20	7	896
UOP	144	20	29	3,712
TOTALS	3,337		2,380	304,616

MARKET ADJUSTMENTS

TYPE	MDL	EFF. AREA	TOT ADJ PTS	EFF. BASE RATE	REPL. COST NEW	AYB	EYB	ECON	FNCT		NORM	% COND
0900	01	2,380	121.1672	143.89	342,458	1990	2005	0	0	0	11.05	88.95

1 SNGL FAM – 100% - 2023 Heated Area: 1759 HX Base Yr 2023

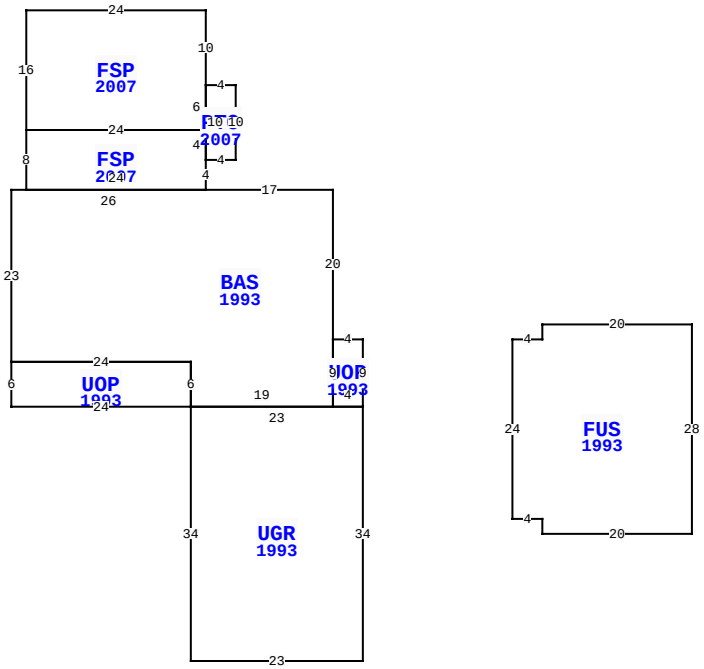

75055 EDWARDS RD, YULEE

BLD DATE		LGL DATE	
XF DATE		LAND DATE	
INC DATE		AG DATE	

VALUATION SUMMARY

VALUATION BY		STANDARD
Tax Group: 4	Tax Dist:	
BUILDING MARKET VALUE		304,616
TOTAL MARKET OB/XF VALUE		43,921
TOTAL LAND VALUE - MARKET		110,000
TOTAL MARKET VALUE		458,537
SOH/AGL Deduction		54,916
ASSESSED VALUE		403,621
TOTAL EXEMPTION VALUE	HX HB VX	55,000
BASE TAXABLE VALUE		348,621
TOTAL JUST VALUE		458,537
NCON VALUE		0
INCOME VALUE		
PREVIOUS YEAR MKT VALUE		367,601

PERMIT NUM	DESCRIPTION	AMT	ISSUED
B18302	SWIM POOL	25,000	08/01/2006

SALES DATA

OFF RECORD Number	DATE	TYPE INST	Q U	V I	RSN CD	SALE PRICE
2579/0494	7/15/2022	WD	Q	I	01	584,000
GRANTOR: NEWTON RAYMOND JAMES						
GRANTEE: CICERO JOSEPH						
2309/0287	4/26/2019	WD	U	I	37	388,500
GRANTOR: GREGORY KEVIN J & TAR						
GRANTEE: AMERICAN INTERNAT'L						

BUILDING NOTES

BUILDING DIMENSIONS

UOP=[YR=1993] W4 BAS=[YR=1993] N20 W17 FSP=[YR=2007] N4 PTO=[YR=2007] E4 N10 W4 FSP=[YR=2007] N10 W24 S16 E24 N6$ S10$ N4 W24 S8 E24$ W26 S23 UOP=[YR=1993] S6 E24 N6 W24$ E24 S6 UGR=[YR=1993] S34 E23 N34 W23$ E19 N9$ S9 E4 N9$ PTR= E20 FUS=[YR=1993] E4 N2 E20 S28 W20 N2 W4 N24$ W20$.

EXTRA FEATURES

LN	OB/XF CODE	DESCRIPTION	BLD	CAP	L	W	UNITS	UT	Adj R	ADJ UNIT PRICE	ORIG COND	YEAR ON	YEAR ACTUAL	Q	% COND	OB/XF MKT VALUE	NOTES
1	0300	BOAT DCK W	0	100	19	6	114.00	SF	40.00	40.00	100	1990	1990	3	20	912	
2	0500	FP-PRE FAB	0	100	0	0	1.00	UT	3,500.00	3,500.00	100	1991	1991	3	72	2,520	
3	0300	BOAT DCK W	0	100	0	0	246.00	SF	40.00	40.00	100	1997	1997	3	26	2,558	
4	0303	FLT DOCK W	0	100	10	16	160.00	SF	26.00	26.00	100	1997	1997	3	26	1,082	
5	0311	WD GANG WY	0	100	0	0	10.00	SF	45.00	45.00	100	1997	1997	3	20	90	
6	0351	CARPORT MT	0	100	16	12	192.00	SF	4.00	4.00	100	2001	2001	3	20	154	
7	0812	CONCRETE C	0	100	0	0	2,428.00	SF	4.00	4.00	100	2007	2007	3	89	8,644	
8	0855	CONC PAVER	0	100	0	0	599.00	SF	10.00	10.00	100	2007	2007	3	89	5,331	
9	0861	POOL GUNIT	0	100	0	0	512.00	SF	85.00	85.00	100	2007	2007	3	52	22,630	

LAND DESCRIPTION

TOTAL OB/XF 43,921

LN	USE CODE	CLS	LAND USE DESCRIPTION	CAP	RD	LOC ZONE	FRONT	DEPTH	TOT LND UTS	UNIT TYPE	DT	DPTH FACT	% COND	TOT ADJ	UNIT PRICE	ADJ UNIT PRICE	LAND VALUE	OTHER ADJUSTMENTS AND NOTES	YEAR	DENSITY	DECL	FRZ	YR	CONSRV
1	000130	C	SFR WATER	100	0006	RS-1	0.00	0.00	1.00	LT		1.00	1.00	1.00	110,000.00	110,000.00	110,000							

REVIEW DATE 09/24/2018 BY KBA Total Acres: 0.00 Total Land Value: 110,000 Market: 0 Agricultural: 0 Common: 110,000 PRINTED 08/02/2023 BY SYS