PARCEL 4-1 SEC 12-2N-28 &
S-1 OF LOT 2 & ALL LOT 3
PHILIPS MANOR SUB PB 2/78

COLLINS STEVE & JANE P
1433 PHILIPS MANOR ROAD
FERNANDINA BEACH, FL 32034

2023

12-2N-28-0000-0004-0010

NASSAU COUNTY PROPERTY

BUILDING CHARACTERISTICS

ELEMENT	CD	CONSTRUCTION
Exterior Wall	12	CEDAR 100
Roof Structur	08	IRREGULAR 100
Roof Cover	12	MODULAR MT 100
Interior Wall	05	DRYWALL 100
Interior Floo	11	CLAY TILE 70
Interior Floo	14	CARPET 30
Air Condition	03	CENTRAL 100
Heating Type	04	AIR DUCTED 100
Bedrooms		4 100
Bathrooms		4.5 100
Frame	02	WOOD FRAME 100
Stories	2.	2. 100
Units		0 100
Occupancy	00	NONE 100
Quality	06	Quality Level 06
DOR CODE	0100	SINGLE FAMILY
MAP NUM		MKT AREA 03
NEIGHBORHOOD/LOC	3029.00	

AREA TYPE	TOTAL GROSS AREA	PCT OF BASE	TOT ADJ AREA	SUBAREA MARKET VALUE
BAL	24	15	4	441
FUS	986	100	986	108,901
HXB	2,475	100	2,475	273,356
HXG	1,008	55	554	61,187
HXK	110	10	11	1,215
HXK	192	10	19	2,098
HXK	575	10	58	6,405
HXP	108	30	32	3,534
HXP	632	30	190	20,985
HXS	85	40	34	3,756
TOTALS	7,203		5,169	570,899

MARKET ADJUSTMENTS

TYPE	MDL	EFF. AREA	TOT ADJ PTS	EFF. BASE RATE	REPL. COST NEW	AYB	EYB	ECON	FNCT		NORM	% COND
0100	01	5,169	134.4868	121.37	627,362	2004	2004	0	0	0	9.00	91.00

1 SINGLE FAM – 65.25% - 2005 Heated Area: 4267 HX Base Yr 2005

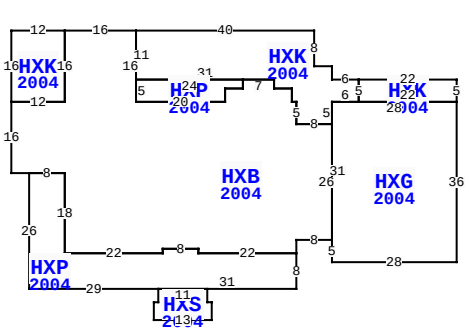

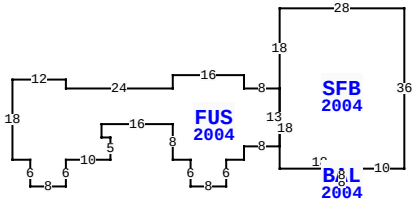

** This building has 11 Sub-Areas

1433 PHILIPS MANOR RD, FERNANDINA BEACH

BLD DATE		LGL DATE	
XF DATE		LAND DATE	
INC DATE		AG DATE	

VALUATION SUMMARY

VALUATION BY		STANDARD
Tax Group: 8	Tax Dist:	
BUILDING MARKET VALUE		570,899
TOTAL MARKET OB/XF VALUE		5,502
TOTAL LAND VALUE - MARKET		275,000
TOTAL MARKET VALUE		851,401
SOH/AGL Deduction		336,086
ASSESSED VALUE		515,315
TOTAL EXEMPTION VALUE	HX HB	50,000
BASE TAXABLE VALUE		465,315
TOTAL JUST VALUE		851,401
NCON VALUE		0
INCOME VALUE		
PREVIOUS YEAR MKT VALUE		803,103

PERMIT NUM	DESCRIPTION	AMT	ISSUED

SALES DATA

OFF RECORD Number	DATE	TYPE INST	Q / U	V / I	RSN CD	SALE PRICE
1132/1633	4/28/2003	WD	U	I	01	100

GRANTOR: COLLINS STEVE & JANE

GRANTEE: COLLINS STEVE & JAN

BUILDING NOTES

BUILDING DIMENSIONS

HXK=[YR=2004] W22 HXK=[YR=2004] W6 N3 W4 N8 W40 HXB=[YR=2004] W16 HXK=[YR=2004] W12 S16 E12 N16 $ S16 W12 S16 E4 HXP=[YR=2004] S26 E29 HXS=[YR=2004] S3 W1 S4 E13 N4 W1 N3 W11 $ E31 N8 W22 N1 W8 S1 W22 N18 W8 $ E8 S18 E22 N1 E8 S1 E22 N3 E8 HXG=[YR=2004] S5 E28 N36 W28 S31 $ N26 W8 N5 W1 N3 W4 N2 W7 HXP=[YR=2004] W24 S5 E20 N3 E4 N2 $ S2 W4 S3 W20 N16 $ S11 E31 S2 E4 S3 E1 S5 E8 N5 E6 N5 $ S5 E22 N5 $ PTR= E15 FUS=[YR=2004] E12 S2 E24 N3 E16 S3 E8 SFB=[YR=2004] N18 E28 S36 W10 BAL=[YR=2004] S3 W8 N3 E8 $ W18 N18 $ S13 W8 S3 W4 S6 W8 N6 W4 N8 W16 S3 E2 S5 W10 S6 W8 N6 W4 N18 $ W15 $.

EXTRA FEATURES

LN	OB/XF CODE	DESCRIPTION	BLD	CAP	L	W	UNITS	UT	Adj R	ADJ UNIT PRICE	ORIG COND	YEAR ON	YEAR ACTUAL	Q	% COND	OB/XF MKT VALUE	NOTES
1	0500	FP-PRE FAB	0	100	0	0	1.00	UT	3,500.00	3,500.00	100	2004	2004	3	89	3,115	
2	0810	CONCRETE A	0	100	185	1	185.00	SF	6.50	6.50	100	2004	2004	3	86	1,034	
3	0810	CONCRETE A	0	100	0	0	242.00	SF	6.50	6.50	100	2004	2004	3	86	1,353	

LAND DESCRIPTION

TOTAL OB/XF 5,502

LN	USE CODE	CLS	LAND USE DESCRIPTION	CAP	RD	LOC ZONE	FRONT	DEPTH	TOT LND UTS	UNIT TYPE	DT	DPTH FACT	% COND	TOT ADJ	UNIT PRICE	ADJ UNIT PRICE	LAND VALUE	OTHER ADJUSTMENTS AND NOTES	YEAR	DENSITY	DECL	FRZ	YR	CONSRV
1	000100	C	SFR	100	0006		0.00	0.00	1.00	LT		1.00	1.00	1.10	250,000.00	275,000.00	275,000							

REVIEW DATE 03/21/2022 BY KWA Total Acres: 0.00 Total Land Value: 275,000 Market: 0 Agricultural: 0 Common: 275,000 PRINTED 08/02/2023 BY SYS