LOT 59
IN OR 1966/381
NORTH HAMPTON #4 PB 6/384

CAVEY DONALD R
96154 LONG BEACH DR
FERNANDINA BEACH, FL 32034

**2023**

**12-2N-27-1462-0059-0000**

## BUILDING CHARACTERISTICS

| ELEMENT | CD | CONSTRUCTION |
|---|---|---|
| Exterior Wall | 16 | WD FR STUC 100 |
| Roof Structur | 08 | IRREGULAR 100 |
| Roof Cover | 03 | COMP SHNGL 100 |
| Interior Wall | 05 | DRYWALL 100 |
| Interior Floo | 11 | CLAY TILE 60 |
| Interior Floo | 14 | CARPET 40 |
| Air Condition | 03 | CENTRAL 100 |
| Heating Type | 04 | AIR DUCTED 100 |
| Bedrooms | | 3 100 |
| Bathrooms | | 2 100 |
| Frame | 02 | WOOD FRAME 100 |
| Stories | 1. | 1. 100 |
| Units | | 0 100 |
| Occupancy | 00 | NONE 100 |
| Quality | 02 | Quality Level 02 |
| DOR CODE | 0100 | SINGLE FAMILY |
| MAP NUM | | MKT AREA 04 |
| NEIGHBORHOOD/LOC | 4043.00 | |

| AREA TYPE | TOTAL GROSS AREA | PCT OF BASE | TOT ADJ AREA | SUBAREA MARKET VALUE |
|---|---|---|---|---|
| BAS | 2,035 | 100 | 2,035 | 236,814 |
| FGR | 640 | 55 | 352 | 40,962 |
| FOP | 49 | 30 | 15 | 1,745 |
| FOP | 176 | 30 | 53 | 6,168 |
| PTO | 264 | 5 | 13 | 1,512 |
| TOTALS | 3,164 | | 2,468 | 287,203 |

## MARKET ADJUSTMENTS

| TYPE | MDL | EFF. AREA | TOT ADJ PTS | EFF. BASE RATE | REPL. COST NEW | AYB | EYB | ECON | FNCT | | NORM | % COND |
|---|---|---|---|---|---|---|---|---|---|---|---|---|
| 0900 | 01 | 2,468 | 106.5216 | 126.49 | 312,177 | 2006 | 2006 | 0 | 0 | 0 | 8.00 | 92.00 |

1 SNGL FAM – 100% - 2018 Heated Area: 2035 HX Base Yr 2018

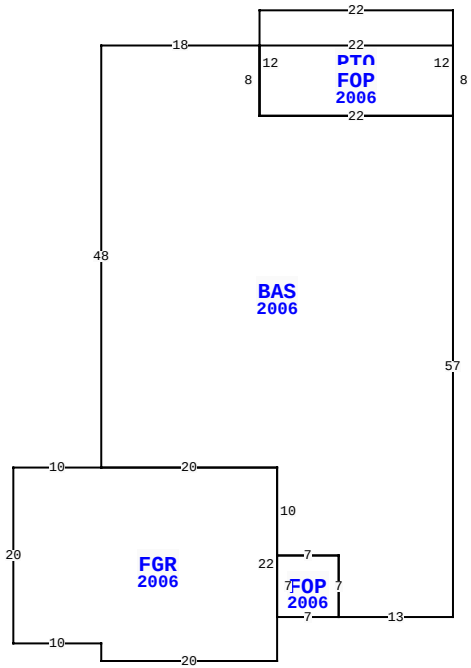


96154 LONG BEACH DR, FERNANDINA BEACH

| | | | |
|---|---|---|---|
| BLD DATE | 03/29/2023 NW | LGL DATE | |
| XF DATE | | LAND DATE | |
| INC DATE | | AG DATE | |

## NASSAU COUNTY PROPERTY

PAGE 1 of 1 4

### VALUATION SUMMARY

| | | |
|---|---|---|
| VALUATION BY | | STANDARD |
| Tax Group: 4 | Tax Dist: | |
| BUILDING MARKET VALUE | | 287,203 |
| TOTAL MARKET OB/XF VALUE | | 11,929 |
| TOTAL LAND VALUE - MARKET | | 85,000 |
| TOTAL MARKET VALUE | | 384,132 |
| SOH/AGL Deduction | | 136,155 |
| ASSESSED VALUE | | 247,977 |
| TOTAL EXEMPTION VALUE | HX HB | 50,000 |
| BASE TAXABLE VALUE | | 197,977 |
| TOTAL JUST VALUE | | 384,132 |
| NCON VALUE | | 0 |
| INCOME VALUE | | |
| PREVIOUS YEAR MKT VALUE | | 315,633 |

| PERMIT NUM | DESCRIPTION | AMT | ISSUED |
|---|---|---|---|
| B19796 | ADDITION | 7,500 | 04/01/2007 |
| P11100 | OTHER | 0 | 05/01/2006 |
| C17098 | CO ISSUED | 230,000 | 02/01/2006 |
| R08897 | REPAIR/RRF | 5,000 | 02/01/2006 |
| B17098 | NEW CONSTR | 230,000 | 02/01/2006 |

## SALES DATA

| OFF RECORD Number | DATE | TYPE INST | Q / U | V / I | RSN CD | SALE PRICE |
|---|---|---|---|---|---|---|
| 1966/0381 | 2/25/2015 | WD | Q | I | 01 | 269,900 |
| GRANTOR: HILLS ROBERT A JR & M | | | | | | |
| GRANTEE: CAVEY DONALD R | | | | | | |
| 1444/1133 | 9/14/2006 | WD | Q | I | | 318,700 |
| GRANTOR: MORRISON HOMES INC | | | | | | |
| GRANTEE: HILLS ROBERT A JR & | | | | | | |

## BUILDING NOTES

## BUILDING DIMENSIONS

PTO=[YR=2007] N12 W22 S12 E22$ BAS=[YR=2006] W22 FOP=[YR=2006] N8 E22 S8 W22 $ N8 W18 S48 FGR=[YR=2006] W10 S20 E10 S2 E20 N22 W20 $ E20 S10 FOP=[YR=2006] E7 S7 W7 N7 $ E7 S7 E13 N57 $ .

## EXTRA FEATURES

| LN | OB/XF CODE | DESCRIPTION | BLD | CAP | L | W | UNITS | UT | Adj R | ADJ UNIT PRICE | ORIG COND | YEAR ON | YEAR ACTUAL | Q | % COND | OB/XF MKT VALUE | NOTES |
|---|---|---|---|---|---|---|---|---|---|---|---|---|---|---|---|---|---|
| 1 | 0500 | FP-PRE FAB | 0 | 100 | 0 | 0 | 1.00 | UT | 3,500.00 | 3,500.00 | 100 | 2006 | 2006 | 3 | 91 | 3,185 | |
| 2 | 0812 | CONCRETE C | 0 | 100 | 0 | 0 | 1,443.00 | SF | 4.00 | 4.00 | 100 | 2006 | 2006 | 3 | 88 | 5,079 | |
| 3 | 0462 | ST/AL FNC | 0 | 100 | 0 | 0 | 488.00 | SF | 10.00 | 10.00 | 100 | 2006 | 2006 | 3 | 48 | 2,342 | |
| 4 | 0910 | SCRN RM L | 0 | 100 | 12 | 21 | 252.00 | SF | 15.00 | 15.00 | 100 | 2007 | 2007 | 3 | 35 | 1,323 | |

## LAND DESCRIPTION

TOTAL OB/XF 11,929

| LN | USE CODE | CLS | LAND USE DESCRIPTION | CAP | RD | LOC ZONE | FRONT | DEPTH | TOT LND UTS | UNIT TYPE | DT | DPTH FACT | % COND | TOT ADJ | UNIT PRICE | ADJ UNIT PRICE | LAND VALUE | OTHER ADJUSTMENTS AND NOTES | YEAR | DENSITY | DECL | FRZ | YR | CONSRV |
|---|---|---|---|---|---|---|---|---|---|---|---|---|---|---|---|---|---|---|---|---|---|---|---|---|
| 1 | 000136 | C | SFR INT | 100 | | | 0.00 | 0.00 | 1.00 | LT | | 1.00 | 1.00 | 1.00 | 85,000.00 | 85,000.00 | 85,000 | | | | | | | |

REVIEW DATE 05/23/2018 BY SBX Total Acres: 0.00 Total Land Value: 85,000 Market: 0 Agricultural: 0 Common: 85,000 PRINTED 08/02/2023 BY SYS