LOT 586
NORTH HAMPTON PHASE 5 PB 7/24

ZURICK SUE ANN
85357 SAGAPONACK DRIVE
FERNANDINA BEACH, FL 32034

2023

12-2N-27-1460-0586-0000

BUILDING CHARACTERISTICS

ELEMENT	CD	CONSTRUCTION
Exterior Wall	16	WD FR STUC 100
Roof Structur	08	IRREGULAR 100
Roof Cover	03	COMP SHNGL 100
Interior Wall	05	DRYWALL 100
Interior Floo	11	CLAY TILE 60
Interior Floo	13	LVT/LAMNT 40
Air Condition	03	CENTRAL 100
Heating Type	04	AIR DUCTED 100
Bedrooms		5 100
Bathrooms		3.5 100
Frame	02	WOOD FRAME 100
Stories	2.	2. 100
Units		0 100
Occupancy	00	NONE 100
Quality	04	Quality Level 04

DOR CODE 0100 SINGLE FAMILY
MAP NUM | MKT AREA 04
NEIGHBORHOOD/LOC 4043.00

AREA TYPE	TOTAL GROSS AREA	PCT OF BASE	TOT ADJ AREA	SUBAREA MARKET VALUE
BAS	1,579	100	1,579	200,964
FEP	246	80	197	25,073
FGR	462	55	254	32,327
FOP	174	30	52	6,618
FSP	480	40	192	24,436
FUS	1,061	100	1,061	135,037
PTO	50	5	2	255
TOTALS	4,052		3,337	424,710

MARKET ADJUSTMENTS

TYPE	MDL	EFF. AREA	TOT ADJ PTS	EFF. BASE RATE	REPL. COST NEW	AYB	EYB	ECON	FNCT		NORM	% COND
0900	01	3,337	116.4996	138.34	461,641	2006	2006	0	0	0	8.00	92.00

1 SNGL FAM – 100% - 2021 Heated Area: 2640 HX Base Yr 2021

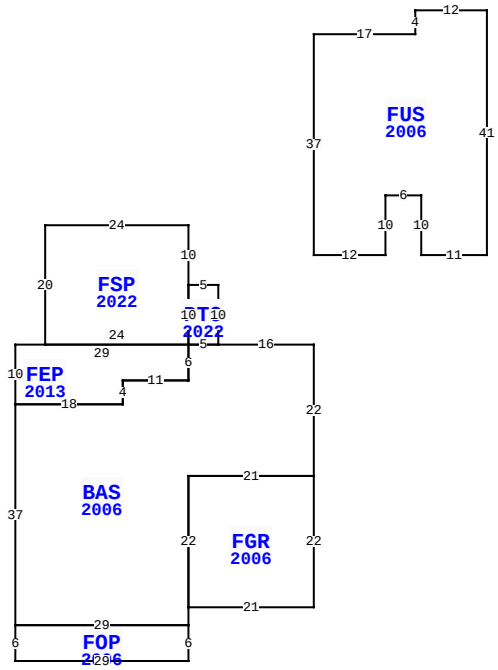

BLD DATE	03/29/2023	NW	LGL DATE
XF DATE			LAND DATE
INC DATE			AG DATE

85357 SAGAPONACK DR, FERNANDINA BEACH

NASSAU COUNTY PROPERTY

PAGE 1 of 1 4

VALUATION SUMMARY

VALUATION BY		STANDARD
Tax Group: 4	Tax Dist:	
BUILDING MARKET VALUE		424,710
TOTAL MARKET OB/XF VALUE		6,996
TOTAL LAND VALUE - MARKET		127,500
TOTAL MARKET VALUE		559,206
SOH/AGL Deduction		193,460
ASSESSED VALUE		365,746
TOTAL EXEMPTION VALUE	HX HB WX	55,000
BASE TAXABLE VALUE		310,746
TOTAL JUST VALUE		559,206
NCON VALUE		30,777
INCOME VALUE		
PREVIOUS YEAR MKT VALUE		413,196

PERMIT NUM	DESCRIPTION	AMT	ISSUED
22011395	ADDITION	0	07/26/2022
B1326882	ADDITION	17,879	02/01/2013
M11009	MECH OTHER	0	02/01/2006
E16593	ELEC OTHER	1,950	01/01/2006
P10440	OTHER	0	12/01/2005
C16181	CO ISSUED	363,490	09/01/2005

SALES DATA

OFF RECORD Number	DATE	TYPE INST	Q / U	V / I	RSN CD	SALE PRICE
2415/1087	11/10/2020	WD	Q	I	01	410,000
GRANTOR: SCHELLING DEANNE & CL						
GRANTEE: ZURICK SUE ANN						
1419/0068	6/09/2006	WD	Q	I		360,000
GRANTOR: RICHMOND AMERICAN HOM						
GRANTEE: SCHELLING DEANNE &						

BUILDING NOTES

BUILDING DIMENSIONS

BAS=[YR=2006] W16PTO=[YR=2022] N10 W5 FSP=[YR=2022] N10 W24 S20 E24 N10$ S10 E5$ W5 FEP=[YR=2013] W29 S10 E18 N4 E11 N6$ S6 W11 S4 W18 S37 FOP=[YR=2006] S6 E29 N6 W29$ E29N3 FGR=[YR=2006] E21 N22 W21 S22$ N22 E21 N22$ PTR=N15 FUS=[YR=2006] N37 E17 N4 E12 S41 W11 N10 W6 S10 W12$ S15$.

EXTRA FEATURES

LN	OB/XF CODE	DESCRIPTION	BLD	CAP	L	W	UNITS	UT	Adj R	ADJ UNIT PRICE	ORIG COND	YEAR ON	YEAR ACTUAL	Q	% COND	OB/XF MKT VALUE	NOTES
1	0500	FP-PRE FAB	0	100	0	0	1.00	UT	3,500.00	3,500.00	100	2006	2006	3	91	3,185	
2	0811	CONCRETE B	0	100	0	0	596.00	SF	5.20	5.20	100	2006	2006	3	88	2,727	
3	0810	CONCRETE A	0	100	20	3	60.00	SF	6.50	6.50	100	2006	2006	3	88	343	
4	1129	STONE 8"	0	100	0	0	96.00	SF	7.88	7.88	100	2013	2013	3	98	741	

LAND DESCRIPTION

TOTAL OB/XF 6,996

LN	USE CODE	CLS	LAND USE DESCRIPTION	CAP	RD	LOC ZONE	FRONT	DEPTH	TOT LND UTS	UNIT TYPE	DT	DPTH FACT	% COND	TOT ADJ	UNIT PRICE	ADJ UNIT PRICE	LAND VALUE	OTHER ADJUSTMENTS AND NOTES	YEAR	DENSITY	DECL	FRZ	YR	CONSRV
1	000134	C	SFR POND	100		PUD	0.00	0.00	1.00	LT		1.00	1.00	1.00	127,500.00	127,500.00	127,500							

REVIEW DATE 12/02/2022 BY NW Total Acres: 0.00 Total Land Value: 127,500 Market: 0 Agricultural: 0 Common: 127,500 PRINTED 08/02/2023 BY SYS