LOT 486
IN OR 2141/1495
NORTH HAMPTON PHASE 3 PB 7/16

MENDES LLOYD & MARY ELLEN
862419 NORTH HAMPTON CLUB WAY
FERNANDINA BEACH, FL 32034

2023

12-2N-27-1460-0486-0000

NASSAU COUNTY PROPERTY

BUILDING CHARACTERISTICS

ELEMENT	CD	CONSTRUCTION
Exterior Wall	16	WD FR STUC 100
Roof Structur	08	IRREGULAR 100
Roof Cover	03	COMP SHNGL 100
Interior Wall	05	DRYWALL 100
Interior Floo	11	CLAY TILE 60
Interior Floo	14	CARPET 40
Air Condition	03	CENTRAL 100
Heating Type	04	AIR DUCTED 100
Bedrooms		3 100
Bathrooms		2.5 100
Frame	02	WOOD FRAME 100
Stories	2.	2. 100
Units		0 100
Occupancy	00	NONE 100
Quality	04	Quality Level 04
DOR CODE	0100	SINGLE FAMILY
MAP NUM		MKT AREA 04
NEIGHBORHOOD/LOC	4043.00	

AREA TYPE	TOTAL GROSS AREA	PCT OF BASE	TOT ADJ AREA	SUBAREA MARKET VALUE
BAL	40	15	6	723
BAS	2,174	100	2,174	261,871
FGR	736	55	405	48,785
FOP	40	30	12	1,446
FOP	275	30	82	9,877
FUS	1,211	100	1,211	145,872
PTO	70	5	4	482
TOTALS	4,546		3,894	469,056

MARKET ADJUSTMENTS

TYPE	MDL	EFF. AREA	TOT ADJ PTS	EFF. BASE RATE	REPL. COST NEW	AYB	EYB	ECON	FNCT		NORM	% COND
0900	01	3,894	108.4860	128.83	501,664	2009	2009	0	0	0	6.50	93.50

1 SNGL FAM – 100% - 2018 Heated Area: 3385 HX Base Yr 2018

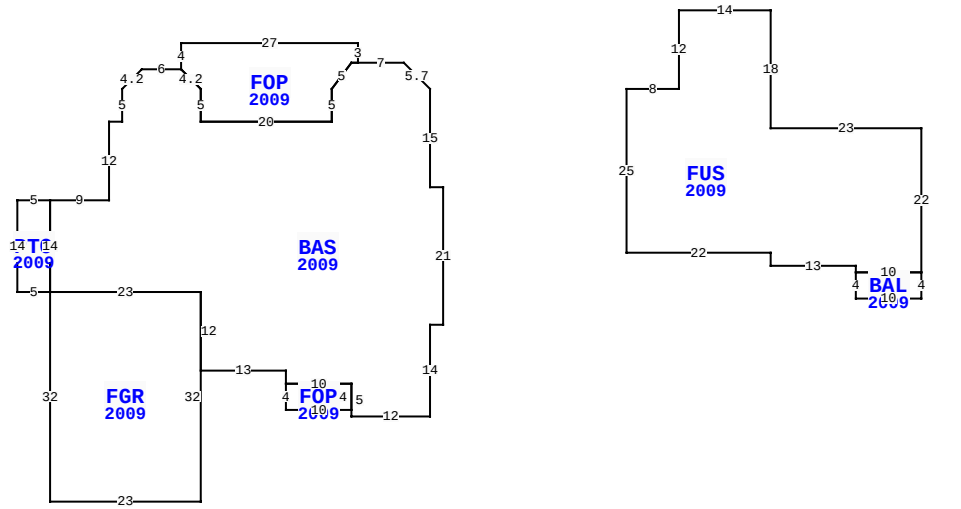

862419 NORTH HAMPTON CLUB WAY, FERNANDINA BEACH

BLD DATE	03/29/2023	NW	LGL DATE
XF DATE	08/10/2009	RK	LAND DATE
INC DATE			AG DATE

VALUATION SUMMARY

VALUATION BY		STANDARD
Tax Group: 4	Tax Dist:	
BUILDING MARKET VALUE		469,056
TOTAL MARKET OB/XF VALUE		18,840
TOTAL LAND VALUE - MARKET		127,500
TOTAL MARKET VALUE		615,396
SOH/AGL Deduction		170,452
ASSESSED VALUE		444,944
TOTAL EXEMPTION VALUE	HX HB	50,000
BASE TAXABLE VALUE		394,944
TOTAL JUST VALUE		615,396
NCON VALUE		0
INCOME VALUE		
PREVIOUS YEAR MKT VALUE		526,533

PERMIT NUM	DESCRIPTION	AMT	ISSUED
C21077	CO ISSUED	0	01/30/2009
E21269	ELEC OTHER	2,000	09/01/2008
M14125	MECH OTHER	0	09/01/2008
P13320	OTHER	0	07/01/2008
R11029	REPAIR/RRF	15,000	02/01/2008
B21077	NEW CONSTR	285,318	02/01/2008

SALES DATA

OFF RECORD Number	DATE	TYPE INST	Q / U	V / I	RSN CD	SALE PRICE
2141/1495	8/18/2017	WD	Q	I	01	552,500
GRANTOR: ANDRES FAMILY TRUST E						
GRANTEE: MENDES LLOYD & MARY						
1501/1600	5/29/2007	WD	Q	V		228,000
GRANTOR: WILLIAMS D A TRUSTEE						
GRANTEE: ANDRES KENT W & LIN						

BUILDING NOTES

BUILDING DIMENSIONS

BAS=[YR=2009] U4 L4 W7 FOP=[YR=2009] N3 W27 S4 D3 R3 S5 E20 N5 U4 R3 E1 $ W1 D4 L3 S5 W20 N5 U3 L3 W6 D3 L3 S5 W2 S12 W9 PTO=[YR=2009] W5 S14 E5 FGR=[YR=2009] S32 E23 N32 W23 $ N14 $ S14 E23 S12 E13 S2 FOP=[YR=2009] S4 E10 N4 W10 $ E10 S5 E12 N14 E2 N21 W2 N15 $ PTR=E30 FUS=[YR=2009] E8 N12 E14 S18 E23 S22 BAL=[YR=2009] S4 W10 N4 E10 $ W10 N1 W13 N2 W22 N25 $ W30 $.

EXTRA FEATURES

L N	OB/XF CODE	DESCRIPTION	BLD	CAP	L	W	UNITS	UT	Adj R	ADJ UNIT PRICE	ORIG COND	YEAR ON	YEAR ACTUAL	Q	% COND	OB/XF MKT VALUE	NOTES
1	0500	FP-PRE FAB	0	100	0	0	1.00	UT	3,500.00	3,500.00	100	2009	2009	3	94	3,290	
2	0855	CONC PAVER	0	100	0	0	1,648.00	SF	10.00	10.00	100	2009	2009	3	91	14,997	
3	1126	CB/STC 8"	0	100	0	0	76.00	SF	8.00	8.00	100	2009	2009	3	91	553	

LAND DESCRIPTION

TOTAL OB/XF 18,840

L N	USE CODE	CLS	LAND USE DESCRIPTION	CAP	R D	LOC ZONE	FRONT	DEPTH	TOT LND UTS	UNIT TYPE	D T	DPTH FACT	% COND	TOT ADJ	UNIT PRICE	ADJ UNIT PRICE	LAND VALUE	OTHER ADJUSTMENTS AND NOTES	YEAR	DENSITY	DECL	FRZ	YR	CONSRV
1	000116	C	SFR MARSH	100		PUD	0.00	0.00	1.00	LT		1.00	1.00	1.00	127,500.00	127,500.00	127,500							

REVIEW DATE 01/18/2019 BY SBA Total Acres: 0.00 Total Land Value: 127,500 Market: 0 Agricultural: 0 Common: 127,500 PRINTED 08/02/2023 BY SYS