LOT 481
IN OR 1463/1872
NORTH HAMPTON PHASE 3 PB 7/16

THE PATERSON FAMILY TRUST/PATERSON CLAUDE
85575 SAGAPONACK DR
FERNANDINA BEACH, FL 32034-8732

2023

12-2N-27-1460-0481-0000

NASSAU COUNTY PROPERTY

BUILDING CHARACTERISTICS

ELEMENT	CD	CONSTRUCTION
Exterior Wall	16	WD FR STUC 100
Roof Structur	08	IRREGULAR 100
Roof Cover	03	COMP SHNGL 100
Interior Wall	05	DRYWALL 100
Interior Floo	14	CARPET 70
Interior Floo	12	HARDWOOD 30
Air Condition	03	CENTRAL 100
Heating Type	04	AIR DUCTED 100
Bedrooms		5 100
Bathrooms		4.5 100
Frame	02	WOOD FRAME 100
Stories	2.	2. 100
Units		0 100
Occupancy	00	NONE 100
Quality	04	Quality Level 04
DOR CODE	0100	SINGLE FAMILY
MAP NUM		MKT AREA 04
NEIGHBORHOOD/LOC	4043.00	

AREA TYPE	TOTAL GROSS AREA	PCT OF BASE	TOT ADJ AREA	SUBAREA MARKET VALUE
BAS	1,996	100	1,996	232,835
FGR	574	55	316	36,862
FOP	80	30	24	2,800
FOP	98	30	29	3,383
FOP	246	30	74	8,633
FST	42	55	23	2,683
FUS	1,696	100	1,696	197,840
PTO	54	5	3	350
PTO	168	5	8	934
STP	60	10	6	700
TOTALS	5,014		4,175	487,017

MARKET ADJUSTMENTS

TYPE	MDL	EFF. AREA	TOT ADJ PTS	EFF. BASE RATE	REPL. COST NEW	AYB	EYB	ECON	FNCT		NORM	% COND
0900	01	4,175	103.9500	123.44	515,362	2011	2011	0	0	0	5.50	94.50

1 SNGL FAM – 100% - 2013 Heated Area: 3692 HX Base Yr 2013

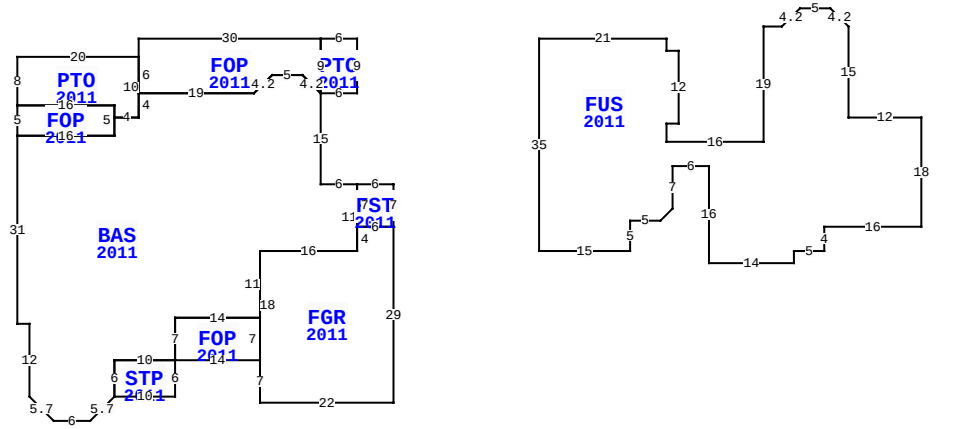

85575 SAGAPONACK DR, FERNANDINA BEACH

BLD DATE	03/29/2023 NW	LGL DATE	
XF DATE		LAND DATE	
INC DATE		AG DATE	

VALUATION SUMMARY

VALUATION BY		STANDARD
Tax Group: 4	Tax Dist:	
BUILDING MARKET VALUE		487,017
TOTAL MARKET OB/XF VALUE		10,492
TOTAL LAND VALUE - MARKET		127,500
TOTAL MARKET VALUE		625,009
SOH/AGL Deduction		335,820
ASSESSED VALUE		289,189
TOTAL EXEMPTION VALUE	HX HB	50,000
BASE TAXABLE VALUE		239,189
TOTAL JUST VALUE		625,009
NCON VALUE		0
INCOME VALUE		
PREVIOUS YEAR MKT VALUE		485,650

PERMIT NUM	DESCRIPTION	AMT	ISSUED
B23953	CO ISSUED	0	12/19/2011
G01611	GAS	1,095	03/01/2011
E23178	ELEC OTHER	0	01/01/2011
M15846	H/AC	0	12/01/2010
P14477	NEW CONSTR	0	10/01/2010
E22953	ELEC OTHER	0	09/01/2010

SALES DATA

OFF RECORD Number	DATE	TYPE INST	Q / U	V / I	RSN CD	SALE PRICE
1463/1872	12/07/2006	WD	Q	V		105,100

GRANTOR: NORTH HAMPTON LLC
GRANTEE: PATERSON CLAUDE & B

BUILDING NOTES

BUILDING DIMENSIONS

PTO=[YR=2011] W6 FOP=[YR=2011] W30 S3 PTO=[YR=2011] W20 S8 FOP=[YR=2011] S5 BAS=[YR=2011] S31 E2 S12 D4 R4 E6 U4 R4 STP=[YR=2011] E10 N6 FOP=[YR=2011] E14 FGR=[YR=2011] S7 E22 N29 FST=[YR=2011] N7 W6 S7 E6 $ W6 S4 W16 S18 $ N7 W14 S7 $ W10 S6 $ N6 E10 N7 E14 N11 E16 N11 W6 N15 U3 L3 W5 D3 L3 W19 S4 W4 S3 W16 $ E16 N5 W16 $ E16 S2 E4 N10$ S6 E19 U3 R3 E5 D3 R3 N9 $ S9 E6 N9 $ PTR= E30 FUS=[YR=2011] E21 S2 E2 S12 W2 S3 E16 N19 E3 U3 R3 E5 D3 R3 S15 E12 S18 W16 S4 W5 S2 W14 N16 W6 S7 D2 L2 W5 S5 W15N35 $ W30 $.

EXTRA FEATURES

LN	OB/XF CODE	DESCRIPTION	BLD	CAP	L	W	UNITS	UT	Adj R	ADJ UNIT PRICE	ORIG COND	YEAR ON	YEAR ACTUAL	Q	% COND	OB/XF MKT VALUE	NOTES
1	0500	FP-PRE FAB	0	100	0	0	1.00	UT	3,500.00	3,500.00	100	2011	2011	3	95	3,325	
2	0811	CONCRETE B	0	100	0	0	1,482.00	SF	5.20	5.20	100	2011	2011	3	93	7,167	

LAND DESCRIPTION

TOTAL OB/XF 10,492

LN	USE CODE	CLS	LAND USE DESCRIPTION	CAP	RD	LOC ZONE	FRONT	DEPTH	TOT LND UTS	UNIT TYPE	DT	DPTH FACT	% COND	TOT ADJ	UNIT PRICE	ADJ UNIT PRICE	LAND VALUE	OTHER ADJUSTMENTS AND NOTES	YEAR	DENSITY	DECL	FRZ	YR	CONSRV
1	000134	C	SFR POND	100		PUD	0.00	0.00	1.00	LT		1.00	1.00	1.00	127,500.00	127,500.00	127,500							

REVIEW DATE 01/06/2023 BY NWA Total Acres: 0.00 Total Land Value: 127,500 Market: 0 Agricultural: 0 Common: 127,500 PRINTED 08/02/2023 BY SYS